Pioneer

# AUDIO/VIDEO MULTI-CHANNEL RECEIVER

# VSX-1325-K
# VSX-1125-K

**Register your product at**
**http://www.pioneerelectronics.com (US)**
**http://www.pioneerelectronics.ca (Canada)**

- **Protect your new investment**
  The details of your purchase will be on file for reference in the event of an insurance claim such as loss or theft.
- **Receive free tips, updates and service bulletins on your new product**
- **Improve product development**
  Your input helps us continue to design products that meet your needs.
- **Receive a free Pioneer newsletter**
  Registered customers can opt in to receive a monthly newsletter.

Operating Instructions

# IMPORTANT

The lightning flash with arrowhead symbol, within an equilateral triangle, is intended to alert the user to the presence of uninsulated "dangerous voltage" within the product's enclosure that may be of sufficient magnitude to constitute a risk of electric shock to persons.

**CAUTION**

**RISK OF ELECTRIC SHOCK DO NOT OPEN**

**CAUTION:**
TO PREVENT THE RISK OF ELECTRIC SHOCK, DO NOT REMOVE COVER (OR BACK). NO USER-SERVICEABLE PARTS INSIDE. REFER SERVICING TO QUALIFIED SERVICE PERSONNEL.

The exclamation point within an equilateral triangle is intended to alert the user to the presence of important operating and maintenance (servicing) instructions in the literature accompanying the appliance.

D3-4-2-1-1_A1_En

# IMPORTANT SAFETY INSTRUCTIONS

1) Read these instructions.
2) Keep these instructions.
3) Heed all warnings.
4) Follow all instructions.
5) Do not use this apparatus near water.
6) Clean only with dry cloth.
7) Do not block any ventilation openings. Install in accordance with the manufacturer's instructions.
8) Do not install near any heat sources such as radiators, heat registers, stoves, or other apparatus (including amplifiers) that produce heat.
9) Do not defeat the safety purpose of the polarized or grounding-type plug. A polarized plug has two blades with one wider than the other. A grounding type plug has two blades and a third grounding prong. The wide blade or the third prong are provided for your safety. If the provided plug does not fit into your outlet, consult an electrician for replacement of the obsolete outlet.
10) Protect the power cord from being walked on or pinched particularly at plugs, convenience receptacles, and the point where they exit from the apparatus.
11) Only use attachments/accessories specified by the manufacturer.
12) Use only with the cart, stand, tripod, bracket, or table specified by the manufacturer, or sold with the apparatus. When a cart is used, use caution when moving the cart/apparatus combination to avoid injury from tip-over.

13) Unplug this apparatus during lightning storms or when unused for long periods of time.
14) Refer all servicing to qualified service personnel. Servicing is required when the apparatus has been damaged in any way, such as power-supply cord or plug is damaged, liquid has been spilled or objects have fallen into the apparatus, the apparatus has been exposed to rain or moisture, does not operate normally, or has been dropped.

D3-7-13-69_En

## WARNING

This equipment is not waterproof. To prevent a fire or shock hazard, do not place any container filled with liquid near this equipment (such as a vase or flower pot) or expose it to dripping, splashing, rain or moisture.

D3-4-2-1-3_A1_En

## WARNING

*Before plugging in for the first time, read the following section carefully.*

**The voltage of the available power supply differs according to country or region. Be sure that the power supply voltage of the area where this unit will be used meets the required voltage (e.g., 230 V or 120 V) written on the rear panel.**

D3-4-2-1-4*_A1_En

## WARNING

To prevent a fire hazard, do not place any naked flame sources (such as a lighted candle) on the equipment.

D3-4-2-1-7a_A1_En

## Operating Environment

Operating environment temperature and humidity: +5 °C to +35 °C (+41 °F to +95 °F); less than 85 %RH (cooling vents not blocked)

Do not install this unit in a poorly ventilated area, or in locations exposed to high humidity or direct sunlight (or strong artificial light)

D3-4-2-1-7c*_A1_En

**Caution**

To prevent fire hazard, the Class 2 Wiring Cable should be used for connection with speaker, and should be routed away from hazards to avoid damage to the insulation of the cable.

D3-7-13-67*_A1_En

**FEDERAL COMMUNICATIONS COMMISSION DECLARATION OF CONFORMITY**

This device complies with part 15 of the FCC Rules. Operation is subject to the following two conditions: (1) This device may not cause harmful interference, and (2) this device must accept any interference received, including interference that may cause undesired operation.

| | |
|---|---|
| Product Name: | AUDIO/VIDEO MULTI-CHANNEL RECEIVER |
| Model Number: | VSX-1325-K / VSX-1125-K |
| Responsible Party Name: | PIONEER ELECTRONICS (USA) INC.<br>SERVICE SUPPORT DIVISION |
| Address: | 1925 E. DOMINGUEZ ST. LONG BEACH, CA 90810-1003, U.S.A. |
| Phone: | 1-800-421-1404 |
| URL: | http://www.pioneerelectronics.com |

D8-10-4*_C1_En

**NOTE:**

This equipment has been tested and found to comply with the limits for a Class B digital device, pursuant to Part 15 of the FCC Rules. These limits are designed to provide reasonable protection against harmful interference in a residential installation. This equipment generates, uses, and can radiate radio frequency energy and, if not installed and used in accordance with the instructions, may cause harmful interference to radio communications. However, there is no guarantee that interference will not occur in a particular installation. If this equipment does cause harmful interference to radio or television reception, which can be determined by turning the equipment off and on, the user is encouraged to try to correct the interference by one or more of the following measures:

— Reorient or relocate the receiving antenna.
— Increase the separation between the equipment and receiver.
— Connect the equipment into an outlet on a circuit different from that to which the receiver is connected.
— Consult the dealer or an experienced radio/TV technician for help.

D8-10-1-2_A1_En

**Information to User**

Alterations or modifications carried out without appropriate authorization may invalidate the user's right to operate the equipment.

D8-10-2_A1_En

**CAUTION**

This product satisfies FCC regulations when shielded cables and connectors are used to connect the unit to other equipment. To prevent electromagnetic interference with electric appliances such as radios and televisions, use shielded cables and connectors for connections.

D8-10-3a_A1_En

## VENTILATION CAUTION

When installing this unit, make sure to leave space around the unit for ventilation to improve heat radiation (at least 40 cm at top, 10 cm at rear, and 20 cm at each side).

## WARNING

Slots and openings in the cabinet are provided for ventilation to ensure reliable operation of the product, and to protect it from overheating. To prevent fire hazard, the openings should never be blocked or covered with items (such as newspapers, table-cloths, curtains) or by operating the equipment on thick carpet or a bed.

D3-4-2-1-7b*_A1_En

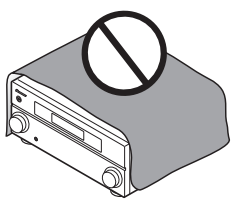

**IMPORTANT NOTICE**

THE MODEL NUMBER AND SERIAL NUMBER OF THIS EQUIPMENT ARE ON THE REAR OR BOTTOM. RECORD THESE NUMBERS ON YOUR ENCLOSED WARRANTY PAGE 111 FOR FUTURE REFERENCE.

D36-AP9-1_A1_En

If the AC plug of this unit does not match the AC outlet you want to use, the plug must be removed and appropriate one fitted. Replacement and mounting of an AC plug on the power supply cord of this unit should be performed only by qualified service personnel. If connected to an AC outlet, the cut-off plug can cause severe electrical shock. Make sure it is properly disposed of after removal.

The equipment should be disconnected by removing the mains plug from the wall socket when left unused for a long period of time (for example, when on vacation).

D3-4-2-2-1a_A1_En

**CAUTION**

The ⏻**STANDBY/ON** switch on this unit will not completely shut off all power from the AC outlet. Since the power cord serves as the main disconnect device for the unit, you will need to unplug it from the AC outlet to shut down all power. Therefore, make sure the unit has been installed so that the power cord can be easily unplugged from the AC outlet in case of an accident. To avoid fire hazard, the power cord should also be unplugged from the AC outlet when left unused for a long period of time (for example, when on vacation).

D3-4-2-2-2a*_A1_En

This product is for general household purposes. Any failure due to use for other than household purposes (such as long-term use for business purposes in a restaurant or use in a car or ship) and which requires repair will be charged for even during the warranty period.

K041_A1_En

**WARNING:** Handling the cord on this product or cords associated with accessories sold with the product may expose you to chemicals listed on proposition 65 known to the State of California and other governmental entities to cause cancer and birth defect or other reproductive harm.
***Wash hands after handling.***

D36-P5_B1_En

**CAUTION:**
**HOT SURFACE. DO NOT TOUCH.**
The top surface over the internal heatsink may become hot when operating this product continuously.

Thank you for buying this Pioneer product. Please read through these operating instructions so you will know how to operate your model properly. After you have finished reading the instructions, put them away in a safe place for future reference.

# Contents


### 01 Before you start

Features . . . . . 9
Checking what's in the box . . . . . 9
Installing the receiver . . . . . 10
Loading the batteries . . . . . 10
Operating range of remote control unit . . . . . 10

### 02 Controls and displays

Remote control . . . . . 11
Front panel . . . . . 12
Display . . . . . 13

### 03 Connecting your equipment

Rear panel . . . . . 15
Determining the speakers' application . . . . . 17
Other speaker connections . . . . . 18
Placing the speakers . . . . . 18
THX speaker system setup . . . . . 18
Some tips for improving sound quality . . . . . 18
Connecting the speakers . . . . . 19
Installing your speaker system . . . . . 20
Standard surround connection . . . . . 20
Bi-amping your speakers . . . . . 21
Bi-wiring your speakers . . . . . 21
Selecting the Speaker system . . . . . 22
Front height setup . . . . . 22
Front wide setup . . . . . 22
Speaker B setup . . . . . 22
Bi-Amping setup . . . . . 22
ZONE 2 setup . . . . . 22
About the audio connection . . . . . 22
About the video converter . . . . . 22
About HDMI . . . . . 23
Connecting your TV and playback components . . . . . 24
Connecting using HDMI . . . . . 24
Connecting your DVD player with no HDMI output . . . . . 25
Connecting your TV with no HDMI input . . . . . 26
Connecting an HDD/DVD recorder, BD recorder and other video sources . . . . . 27
Connecting a satellite/cable receiver or other set-top box . . . . . 28
Connecting other audio components . . . . . 28
About the WMA9 Pro decoder . . . . . 29
Connecting additional amplifiers . . . . . 29
Connecting AM/FM antennas . . . . . 30
Connecting external antennas . . . . . 30
MULTI-ZONE setup . . . . . 30
Making MULTI-ZONE connections . . . . . 31
Connecting to the network through LAN interface . . . 32
Connecting Optional Bluetooth® ADAPTER . . . . . 32
Connecting an HDMI-equipped component to the front panel input . . . . . 32
Connecting an XM Radio tuner *(VSX-1325 only)* . . . . . 33
Connecting a SiriusConnect™ tuner . . . . . 33
Connecting an iPod . . . . . 33
Connecting a USB device . . . . . 34
Connecting a USB device for Advanced MCACC output . . . . . 34
Connecting an IR receiver . . . . . 35
Operating other Pioneer components with this unit's sensor . . . . . 35
Switching components on and off using the 12 volt trigger *(VSX-1325 only)* . . . . . 36
Plugging in the receiver . . . . . 36

### 04 Basic Setup

Switching the speaker impedance . . . . . 37
Changing the OSD display language (OSD Language) . . . . . 37
Automatically conducting optimum sound tuning (Auto MCACC) . . . . . 37
Problems when using the Auto MCACC Setup . . . . 39
The Input Setup menu . . . . . 39
Input function default and possible settings . . . . . 40

### 05 Basic playback

Playing a source . . . . . 41
Playing a source with HDMI connection . . . . . 41
Playing an iPod . . . . . 41
Playing back audio files stored on an iPod . . . . . 42
Playing a USB device . . . . . 42
Playing back audio files stored on a USB memory device . . . . . 43
Playing back photo files stored on a USB memory device . . . . . 43
About playable file formats . . . . . 44
Listening to the radio . . . . . 45
Improving FM sound . . . . . 45
Using Neural Surround . . . . . 45
Tuning directly to a station . . . . . 45
Saving station presets . . . . . 45
Naming station presets . . . . . 45
Listening to station presets . . . . . 45
Listening to Internet radio stations . . . . . 46
Programming the Internet radio stations . . . . . 46
Listening to Satellite Radio . . . . . 47
Listening to XM Radio *(VSX-1325 only)* . . . . . 47
Using XM HD Surround . . . . . 48
Saving channel presets . . . . . 48
Using the XM Menu . . . . . 48
Listening to SIRIUS Radio . . . . . 48
Saving channel presets . . . . . 49
Using the SIRIUS Menu . . . . . 49

*Bluetooth* ADAPTER for Wireless Enjoyment of Music . . . . . 50
Wireless music play . . . . . 50
Pairing the Bluetooth ADAPTER and Bluetooth wireless technology device . . . . . 50
Listening to music contents of a Bluetooth wireless technology device with your system . . . . . 51

## 06 Listening to your system

Auto playback . . . . . 52
Listening in surround sound . . . . . 52
Standard surround sound . . . . . 52
Using the Home THX modes . . . . . 53
Using the Advanced surround effects . . . . . 53
Listening in stereo . . . . . 54
Using Front Stage Surround Advance . . . . . 54
Using Stream Direct . . . . . 54
Selecting MCACC presets . . . . . 55
Choosing the input signal . . . . . 55
Better sound using Phase Control . . . . . 55

## 07 Control with HDMI function

Making Control with HDMI connections . . . . . 56
HDMI Setup . . . . . 56
Before using synchronization . . . . . 57
About synchronized operations . . . . . 57
About connections with a product of a different brand that supports the Control with HDMI function . . . . . 58
Setting the PQLS function . . . . . 58
Cautions on the Control with HDMI function . . . . . 58

## 08 Using other functions

Setting the Audio options . . . . . 59
Setting the Video options . . . . . 61
Switching the speaker terminals . . . . . 62
Using the MULTI-ZONE controls . . . . . 62
Making an audio or a video recording . . . . . 63
Reducing the level of an analog signal . . . . . 63
Using the sleep timer . . . . . 63
Dimming the display . . . . . 63
Switching the HDMI output *(VSX-1325 only)* . . . . . 64
Using the Web Control function . . . . . 64
Checking your system settings . . . . . 64
Resetting the system . . . . . 64
Default system settings . . . . . 65

## 09 Controlling the rest of your system

Operating multiple receivers . . . . . 66
Setting the remote to control other components . . . . 66
Selecting preset codes directly . . . . . 66
Programming signals from other remote controls . . . 67
Erasing one of the remote control button settings . . . 67
Erasing all learnt settings that are in one input function . . . . . 68
Direct function . . . . . 68
Setting the backlight mode . . . . . 68
Multi operation and System off . . . . . 68
Programming a Multi operation or a shutdown sequence . . . . . 69
Using multi operations . . . . . 69
Using System off . . . . . 69
Erasing the settings for the multi-operation . . . . . 69
Resetting the remote control settings . . . . . 70
Default preset codes . . . . . 70
Controlling components . . . . . 70

## 10 The Advanced MCACC menu

Making receiver settings from the Advanced MCACC menu . . . . . 73
Automatic MCACC (Expert) . . . . . 73
Manual MCACC setup . . . . . 75
Fine Channel Level . . . . . 76
Fine Speaker Distance . . . . . 76
Standing Wave . . . . . 76
Acoustic Calibration EQ Adjust . . . . . 77
Acoustic Calibration EQ Professional . . . . . 77
Checking MCACC Data . . . . . 79
Speaker Setting . . . . . 79
Channel Level . . . . . 79
Speaker Distance . . . . . 79
Standing Wave . . . . . 79
Acoustic Cal EQ . . . . . 79
Output MCACC data . . . . . 80
Data Management . . . . . 80
Renaming MCACC presets . . . . . 80
Copying MCACC preset data . . . . . 81
Clearing MCACC presets . . . . . 81

## 11 The System Setup and Other Setup menus

Making receiver settings from the System Setup menu . . . . . 82
Manual speaker setup . . . . . 82
Speaker system setting . . . . . 83
Speaker Setting . . . . . 83
Channel Level . . . . . 84
Speaker Distance . . . . . 84
X-Curve . . . . . 85
THX Audio Setting . . . . . 85
Network Setup menu . . . . . 85
IP address/Proxy setting . . . . . 85
Checking the MAC address . . . . . 86
Network Standby . . . . . 86
The Other Setup menu . . . . . 86
Volume Setup . . . . . 87
Remote Control Mode Setup . . . . . 87
Flicker Reduction Setup . . . . . 87
EXTENSION Setup . . . . . 87

## 12 Additional information


Speaker Setting Guide . . . . . 88
Positional relationship between speakers and monitor . . . . . 89
Troubleshooting . . . . . 89
Power . . . . . 89
No sound . . . . . 90
Other audio problems . . . . . 91
ADAPTER PORT . . . . . 92
Video . . . . . 92
Settings . . . . . 93
Professional Calibration EQ graphical output . . . . . 93
Display . . . . . 94
Remote control . . . . . 94
Web Control . . . . . 95
HDMI . . . . . 95
Important information regarding the HDMI connection . . . . . 96
USB interface . . . . . 96
Internet radio . . . . . 97
XM radio messages . . . . . 98
SIRIUS radio messages . . . . . 99
Surround sound formats . . . . . 100
Dolby . . . . . 100
DTS . . . . . 100
Windows Media Audio 9 Professional . . . . . 100
About THX . . . . . 100
About iPod . . . . . 101
About SIRIUS and XM . . . . . 102
Auto Surround, ALC and Stream Direct with different input signal formats . . . . . 103
Preset code list . . . . . 104
Specifications . . . . . 108
Cleaning the unit . . . . . 109
Our philosophy . . . . . 109

# Flow of settings on the receiver

The unit is a full-fledged AV receiver equipped with an abundance of functions and terminals. It can be used easily after following the procedure below to make the connections and settings.

*The colors of the steps indicate the following:*

**Required setting item**

**Setting to be made as necessary**

---

**1 Before you start**
- Checking what's in the box (page 9)
- Loading the batteries (page 10)

⬇

**2 Determining the speakers' application (page 17)**
- 7.1 channel surround system (Front height)
- 7.1 channel surround system (Front wide)
- 7.1 channel surround system & Speaker B connection
- 5.1 channel surround system & Front Bi-amping connection (High quality surround)
- 5.1 channel surround system & ZONE 2 connection (Multi Zone)

⬇

**3 Connecting the speakers**
- Placing the speakers (page 18)
- Connecting the speakers (page 19)
- Installing your speaker system (page 20)
- Bi-amping your speakers (page 21)

⬇

**4 Connecting the components**
- About the audio connection (page 22)
- About the video converter (page 22)
- Connecting your TV and playback components (page 24)
- Connecting AM/FM antennas (page 30)
- Plugging in the receiver (page 36)

⬇

**5 Switching the speaker impedance (page 37)**

*(Only if the impedance of the connected speakers is 6 Ω to 8 Ω)*

⬇

**6 Power On**

⬇

**7 Changing the OSD display language (OSD Language) (page 37)**

⬇

**8 MCACC speaker settings**
- Automatically conducting optimum sound tuning (Auto MCACC) (page 37)

⬇

**9 The Input Setup menu (page 39)**

*(When using connections other than the recommended connections)*

⬇

**10 Basic playback (page 41)**

⬇

**11 Switching the HDMI output** *(VSX-1325 only)* **(page 64)**

⬇

**12 Adjusting the sound and picture quality as desired**
- Using the various listening modes
- Better sound using Phase Control (page 55)
- Measuring the all EQ type (SYMMETRY/ALL CH ADJ/FRONT ALIGN) (page 73)
- Changing the channel level while listening (*Tip* on page 84)
- Switching on/off the Acoustic Calibration EQ, Sound retriever or Dialog Enhancement (page 59)
- Setting the PQLS function (page 58)
- Setting the Audio options (Tone, Loudness or Sound delay, etc.) (page 59)
- Setting the Video options (page 61)

⬇

**13 Other optional adjustments and settings**
- Control with HDMI function (page 56)
- The Advanced MCACC menu (page 73)
- The System Setup and Other Setup menus (page 82)

⬇

**14 Making maximum use of the remote control**
- Operating multiple receivers (page 66)
- Setting the remote to control other components (page 66)

# Chapter 1:
# Before you start

## Features

- **Advanced Direct Energy design**

This receiver offers a new advancement in discrete design unique to Pioneer for high-power drivability, low distortion and stable imaging.

- **HDMI (Ver.1.4 with 3D, Audio Return Channel)**

A compatible component is required to use the above function.

- **Remote operation on an iPhone/iPod touch**

Operation via LAN is possible from an iPhone or iPod touch by downloading a Pioneer original application (iControlAV) from the iTunes Store.

- **iPhone/iPod playback**

Your iPhone or iPod can be connected to the receiver's USB terminal to play the music/video files on the iPhone/iPod.

- **PQLS multi surround**

Jitterless high quality playback is possible by connecting a PQLS-compatible player with HDMI connections.

- **Dolby Pro Logic IIz compatible**

Adding a pair of speakers above the front left and right speakers adds expressiveness in the vertical direction to the previous horizontally-oriented sound field. The height channel strengthens the sound field's sense of three-dimensionality and air, producing presence and expansion.

- **Internet Radio**

By connecting this receiver to the network via the LAN terminal, you can listen to Internet radio stations.

- **XM[1] and SIRIUS Ready**

With the XM[1] and SIRIUS Radio terminals, you'll be up and running in no time.

- ***Bluetooth* compatible**

Using the *Bluetooth* ADAPTER (Pioneer Model No. AS-BT100)[2] lets you enjoy music files on an iPhone or other *Bluetooth* wireless technology device wirelessly.

- **Sound Retriever and Sound Retriever Air**

The Sound Retriever feature employs DSP technology to restore sound pressure and smooth jagged artifacts left over after compression. Sound Retriever Air compensates for reduced sound quality due to compression when sending *Bluetooth* signals.

- **Easy setup using Advanced MCACC**

The Auto MCACC Setup provides a quick but accurate surround sound setup, which includes the advanced features of Professional Acoustic Calibration EQ.

- **Web control**

The receiver can be operated using a browser from a computer connected on the same LAN as the receiver.

## Checking what's in the box

Please check that you've received the following supplied accessories:

- Setup microphone (cable: 5 m (16.4 ft.))
- Remote control unit
- AAA size IEC R03 dry cell batteries (to confirm system operation) x2
- AM loop antenna
- FM wire antenna
- iPod cable
- Power cord
- These operating instructions

**Note**

1 XM Radio is only supported on the VSX-1325.
2 The AS-BT100 is sold separately.

## Installing the receiver

- When installing this unit, make sure to put it on a level and stable surface.

Don't install it on the following places:
– on a color TV (the screen may distort)
– near a cassette deck (or close to a device that gives off a magnetic field). This may interfere with the sound.
– in direct sunlight
– in damp or wet areas
– in extremely hot or cold areas
– in places where there is vibration or other movement
– in places that are very dusty
– in places that have hot fumes or oils (such as a kitchen)

- Do not touch this receiver's bottom panel while the power is on or just after it is turned off. The bottom panel becomes hot when the power is on (or right after it is turned off) and could cause burns.

## Loading the batteries

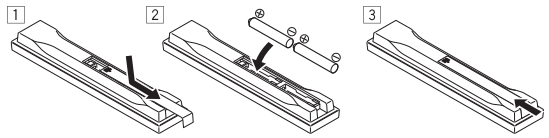


The batteries included with the unit are to check initial operations; they may not last over a long period. We recommend using alkaline batteries that have a longer life.

**CAUTION**

Incorrect use of batteries may result in such hazards as leakage and bursting. Observe the following precautions:

- Never use new and old batteries together.
- Insert the plus and minus sides of the batteries properly according to the marks in the battery case.
- Batteries with the same shape may have different voltages. Do not use different batteries together.
- When disposing of used batteries, please comply with governmental regulations or environmental public instruction's rules that apply in your country or area.
- **WARNING**
  Do not use or store batteries in direct sunlight or other excessively hot place, such as inside a car or near a heater. This can cause batteries to leak, overheat, explode or catch fire. It can also reduce the life or performance of batteries.

## Operating range of remote control unit

The remote control may not work properly if:

- There are obstacles between the remote control and the receiver's remote sensor.
- Direct sunlight or fluorescent light is shining onto the remote sensor.
- The receiver is located near a device that is emitting infrared rays.
- The receiver is operated simultaneously with another infrared remote control unit.

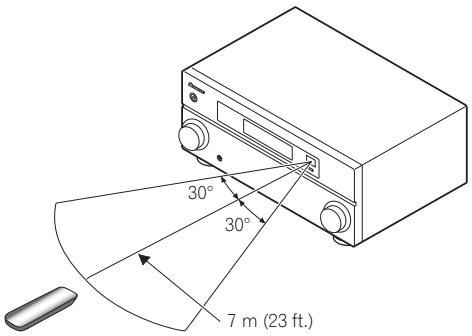

Chapter 2:
# Controls and displays

## Remote control

This section explains how to operate the remote control for the receiver.

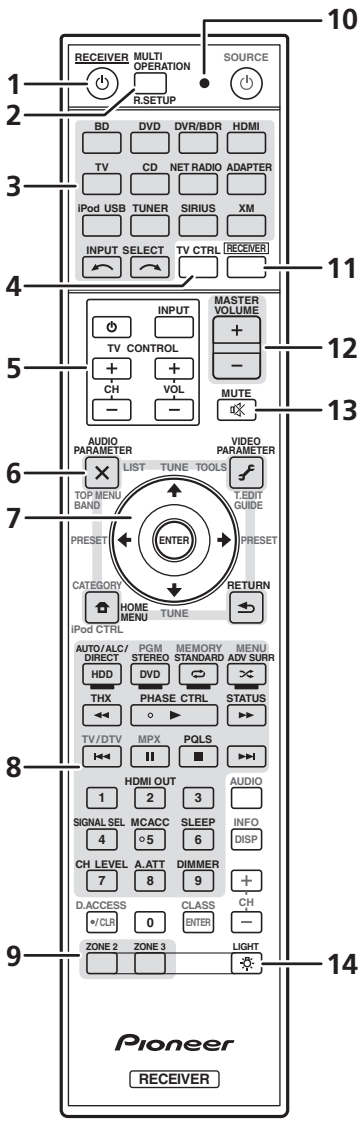


*The remote has been conveniently color-coded according to component control using the following system:*

- **White** – Receiver control, TV control
- **Blue** – Other controls (See page 41, 42, 45, 46, 50 and 70.)

**1 ⏻ RECEIVER**

This switches between standby and on for this receiver.

**2 MULTI OPERATION** – Use to perform multi operations (page 68).

**R.SETUP** – Use to input the preset code when making remote control settings and to set the remote control mode (page 66).

**3 Input function buttons**

Press to select control of other components (page 66). (The XM button can only be used with the VSX-1325.)

Use **INPUT SELECT** to select the input function (page 41).

**4 TV CTRL**

Set the preset code of your TV's manufacturer when controlling the TV (page 66).

**5 TV CONTROL buttons**

These buttons are dedicated to control the TV assigned to the **TV CTRL** button.

**6 Receiver setting buttons**

Press RECEIVER first to access:

**AUDIO PARAMETER** – Use to access the Audio options (page 59).

**VIDEO PARAMETER** – Use to access the Video options (page 61).

**HOME MENU** – Use to access the Home Menu (pages 37, 39, 56, 73, 82 and 85).

**RETURN** – Press to confirm and exit the current menu screen.

**7 ↑/↓/←/→/ENTER**

Use the arrow buttons when setting up your surround sound system (see page 73) and the Audio or Video options (page 59 or 61).

**8 Receiver Control buttons**

Press RECEIVER first to access:

**AUTO/ALC/DIRECT** – Switches between Auto Surround (page 52), Auto Level Control mode and Stream Direct mode (page 54).

**STEREO** – Switches between stereo playback and Front Stage Surround Advance modes (page 54).

**STANDARD** – Press for Standard decoding and to switch various modes (DD Pro Logic, Neo:6, etc.) (page 52).

**ADV SURR** – Use to switch between the various surround modes (page 53).

**THX** – Press to select a Home THX listening mode (page 53).

**PHASE CTRL** – Press to switch on/off Phase Control (page 55).

**STATUS** – Press to check selected receiver settings (page 64).

**PQLS** – Press to select the PQLS setting (page 58).

**HDMI OUT** – *VSX-1325 only:* Switch the HDMI output terminal (page 64).

**SIGNAL SEL** – Use to select an input signal (page 55).

**MCACC** – Press to switch between MCACC presets (page 55).

**SLEEP** – Use to put the receiver in sleep mode and select the amount of time before sleep (page 63).

**CH LEVEL** – Press repeatedly to select a channel, then use ⬅/➡ to adjust the level (page 84).

**A.ATT** – Attenuates (lowers) the level of an analog input signal to prevent distortion (page 63).

**DIMMER** – Dims or brightens the display (page 63).

**9 MULTI-ZONE select buttons**
Switch to perform operations in ZONE 2 and ZONE 3 (page 63). (The ZONE 3 button can only be used with the VSX-1325.)

**10 Remote control LED**
Lights when a command is sent from the remote control (page 66).

**11 RECEIVER**
Switches the remote to control the receiver (used to select the white commands).

Switch to perform operations in the main zone.

Also use this button to set up surround sound.

**12 MASTER VOLUME +/–**
Use to set the listening volume.

**13 MUTE**
Mutes the sound or restores the sound if it has been muted (adjusting the volume also restores the sound).

**14** ☼
Press to turn on/off the illumination for the buttons. The way the buttons light can be selected from four modes (page 68).

## Front panel

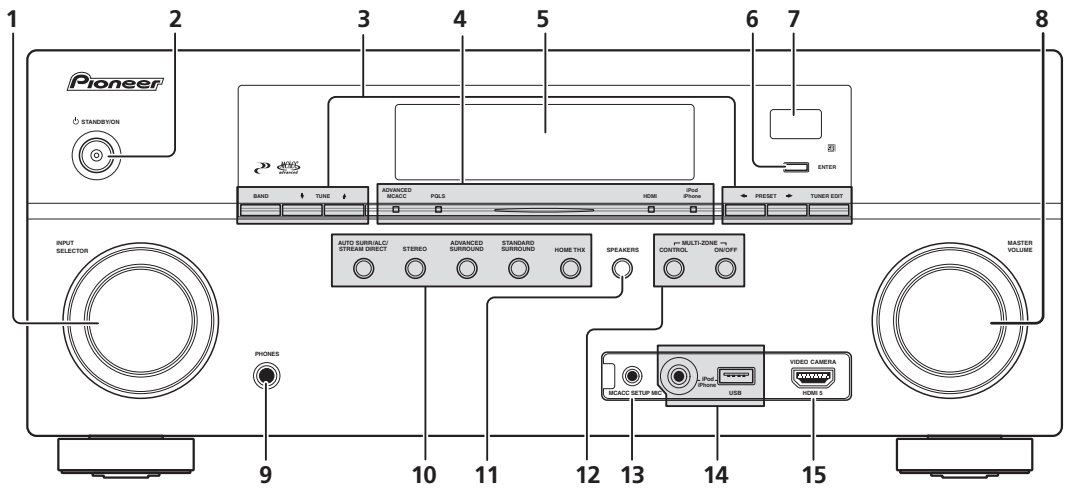


**1 INPUT SELECTOR dial**
Use to select an input function.

**2 ⏻ STANDBY/ON**
Switches the receiver between on and standby.

**3 Tuner controls**
**BAND** – Switches between the AM and FM radio bands (page 45).

**TUNE ⬆/⬇** – Use to find radio frequencies (page 50).

**PRESET ⬅/➡** – Use to find preset stations (page 45).

**TUNER EDIT** – Use with **TUNE ↑/↓**, **PRESET ←/→** and **ENTER** to memorize and name stations for recall (page 45).

**4 Indicators**

**ADVANCED MCACC** – Lights when **EQ** is set to **ON** in the **AUDIO PARAMETER** menu (page 59).

**PQLS** – Lights when the PQLS feature is active (page 58).

**HDMI** – Blinks when connecting an HDMI-equipped component; lights when the component is connected (page 24).

**iPod/iPhone** – Lights to indicate iPod/iPhone is connected (page 33).

**5 Character display**
See *Display* below.

**6 ENTER**

**7 Remote sensor**
Receives the signals from the remote control (see *Operating range of remote control unit* on page 10).

**8 MASTER VOLUME dial**

**9 PHONES jack**
Use to connect headphones. When the headphones are connected, there is no sound output from the speakers.

**10 Listening mode buttons**

**AUTO SURR/ALC/STREAM DIRECT** – Switches between Auto Surround (page 52), Auto Level Control mode and Stream Direct mode (page 54).

**STEREO** – Switches between stereo playback and Front Stage Surround Advance modes (page 54).

**ADVANCED SURROUND** – Use to switch between the various surround modes (page 53).

**STANDARD SURROUND** – Press for Standard decoding and to switch various modes (DD Pro Logic, Neo:6, etc.) (page 52).

**HOME THX** – Press to select a Home THX listening mode (page 53).

**11 SPEAKERS**
Use to change the speaker terminal (page 62).

**12 MULTI-ZONE controls**
If you've made MULTI-ZONE connections (see *MULTI-ZONE setup* on page 30) use these controls to control the sub zone from the main zone (see *Using the MULTI-ZONE controls* on page 62).

**13 MCACC SETUP MIC jack**
Use to connect the supplied microphone (page 37).

**14 iPod/iPhone/USB terminals**
Use to connect your Apple iPod as an audio and video source, or connect a USB device for audio and photo playback (page 33).

**15 HDMI input connector**
Use for connection to a compatible HDMI device (Video camera, etc.) (page 32).

## Display

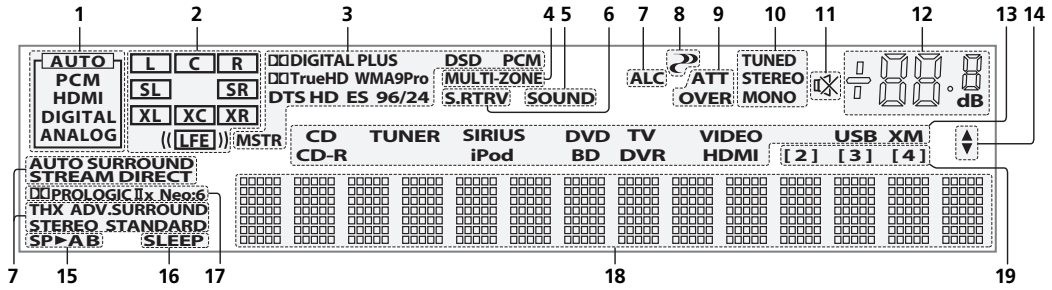


**1 SIGNAL indicators**
Light to indicate the currently selected input signal. **AUTO** lights when the receiver is set to select the input signal automatically (page 55).

**2 Program format indicators**
Light to indicate the channels to which digital signals are being input.

**L/R** – Left front/Right front channel
**C** – Center channel
**SL/SR** – Left surround/Right surround channel
**LFE** – Low frequency effects channel (the **(( ))** indicators light when an LFE signal is being input)
**XL/XR** – Two channels other than the ones above
**XC** – Either one channel other than the ones above, the mono surround channel or matrix encode flag

**3 Digital format indicators**
Light when a signal encoded in the corresponding format is detected.

**DD DIGITAL** – Lights with Dolby Digital decoding.
**DD DIGITAL PLUS** – Lights with Dolby Digital Plus decoding.

**TrueHD** – Lights with Dolby TrueHD decoding.
**DTS** – Lights with DTS decoding.
**DTS HD** – Lights with DTS-HD decoding.
**96/24** – Lights with DTS 96/24 decoding.
**WMA9 Pro** – Lights to indicate that a WMA9 Pro signal is being decoded.
**DSD PCM** – Light during DSD (Direct Stream Digital) to PCM conversion with SACDs.
**PCM** – Lights during playback of PCM signals.
**MSTR** – Lights during playback of DTS-HD Master Audio signals.

**4 MULTI-ZONE**
Lights when the MULTI-ZONE feature is active (page 62).

**5 SOUND**
Lights when any of the Midnight, Loudness or tone controls features is selected (page 59).

Lights when Dialog Enhancement is switched on.

**6 S.RTRV**
Lights when the Sound Retriever function is active (page 59).

**7 Listening mode indicators**

**AUTO SURROUND** – Lights when the Auto Surround feature is switched on (page 52).

**ALC** – Lights when the ALC (Auto level control) mode is selected (page 54).

**STREAM DIRECT** – Lights when Direct/Pure Direct is selected (page 54).

**ADV.SURROUND** – Lights when one of the Advanced Surround modes has been selected (page 53).

**STEREO** – Lights when stereo listening is switched on (page 54).

**STANDARD** – Lights when one of the Standard Surround modes is switched on (page 52).

**THX** – Lights when one of the Home THX modes is selected (page 53).

**8 (PHASE CONTROL)**
Lights when Phase Control is switched on (page 55).

**9 Analog signal indicators**
Light to indicate reducing the level of an analog signal (page 63).

**10 Tuner indicators**

**TUNED** – Lights when a broadcast is being received.

**STEREO** – Lights when a stereo FM broadcast is being received in auto stereo mode.

**MONO** – Lights when the mono mode is set using **MPX**.

**11**
Lights when the sound is muted (page 12).

**12 Master volume level**
Shows the overall volume level.
"**---**" indicates the minimum level, and "**+12dB**" indicates the maximum level.

**13 Input function indicators**
Light to indicate the input function you have selected. (XM only lights for the VSX-1325.)

**14 Scroll indicators**
Light when there are more selectable items when making the various settings.

**15 Speaker indicators**
Lights to indicate the current speaker system, **A** and/or **B** (page 62).

**16 SLEEP**
Lights when the receiver is in sleep mode (page 63).

**17 Matrix decoding format indicators**

**PRO LOGIC IIx** – This lights to indicate Pro Logic II / Pro Logic IIx decoding (page 52).

**Neo:6** – When one of the Neo:6 modes of the receiver is on, this lights to indicate Neo:6 processing (page 52).

**18 Character display**
Displays various system information.

**19 Remote control mode indicator**
Lights to indicate the receiver's remote control mode setting. (Not displayed when set to **1**.) (page 66)

# Chapter 3:
# Connecting your equipment

This receiver provides you with many connection possibilities, but it doesn't have to be difficult. This chapter explains the kinds of components you can connect to make up your home theater system.

**Important**

- Illustration shows the VSX-1325, however connections for the VSX-1125 are the same except where noted.

## Rear panel

VSX-1325

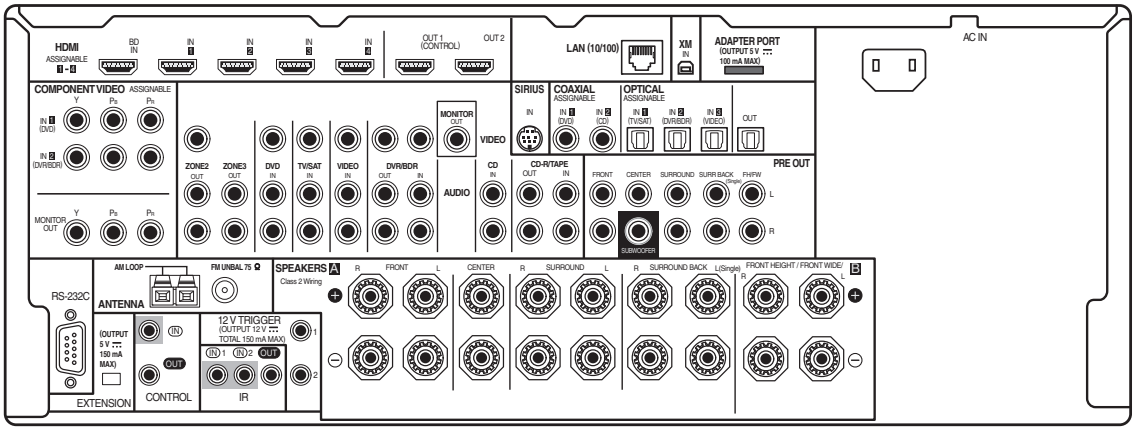


VSX-1125

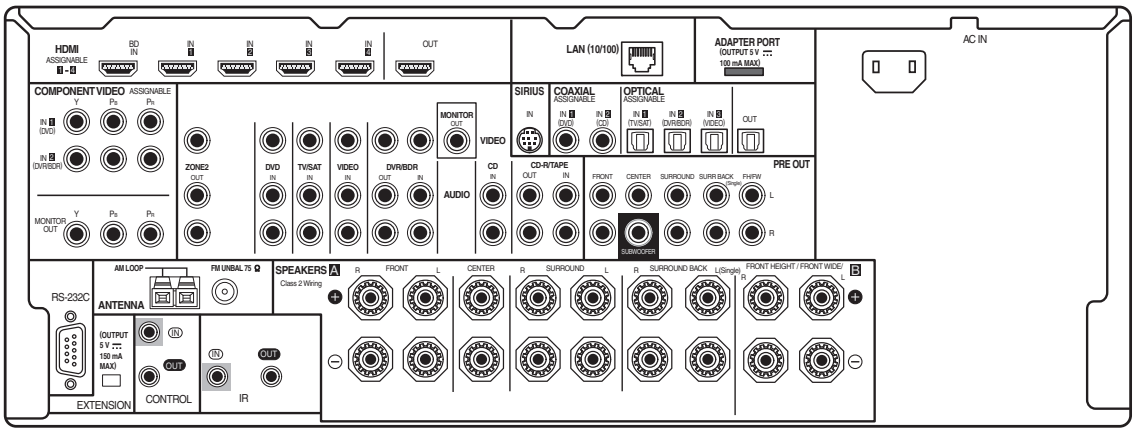

### Note

- The input functions below are assigned by default to the receiver's different input terminals. Refer to *The Input Setup menu* on page 39 to change the assignments if other connections are used.

| Input function | Input Terminals | | |
|---|---|---|---|
| | Digital | HDMI | Component |
| **DVD** | **COAX-1** | | **IN 1** |
| **BD** | | (**BD**) | |
| **TV/SAT** | **OPT-1** | | |
| **DVR/BDR** | **OPT-2** | | **IN 2** |
| **VIDEO** | **OPT-3** | | |
| **HDMI 1** | | (**HDMI-1**) | |
| **HDMI 2** | | (**HDMI-2**) | |
| **HDMI 3** | | (**HDMI-3**) | |
| **HDMI 4** | | (**HDMI-4**) | |
| **HDMI 5** (front panel) | | (**HDMI-5**) | |
| **CD** | **COAX-2** | | |

- The CU-RF100 omni-directional remote control (separately sold) can be connected to the RS-232C and EXTENSION terminals. Using the CU-RF100 lets you display the receiver's display information on the remote control display in your hands and operate it without worrying about obstacles or the direction in which the remote control is pointing.

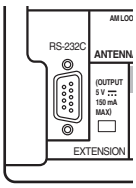


### CAUTION

- Before making or changing the connections, switch off the power and disconnect the power cord from the power outlet. Plugging in should be the final step.

## Determining the speakers' application

This unit permits you to build various surround systems, in accordance with the number of speakers you have.

- Be sure to connect speakers to the front left and right channels (**L** and **R**).
- It is also possible to only connect one of the surround back speakers (**SB**) or neither.

Choose one from Plans [A] to [E] below.

### [A] 7.1 channel surround system (Front height)

**Default setting*

- **Speaker System setting: Normal(SB/FH)**

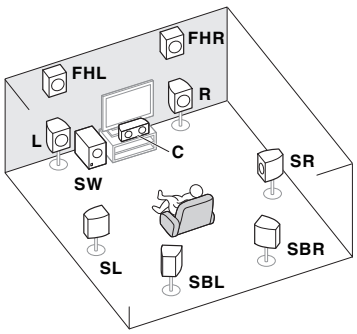


A 7.1 ch surround system connects the left and right front speakers (**L**/**R**), the center speaker (**C**), the left and right front height speakers (**FHL**/**FHR**), the left and right surround speakers (**SL**/**SR**), the left and right surround back speakers (**SBL**/**SBR**), and the subwoofer (**SW**).[1]

This surround system produces a more true-to-life sound from above.

### [B] 7.1 channel surround system (Front wide)

- **Speaker System setting: Normal(SB/FW)**

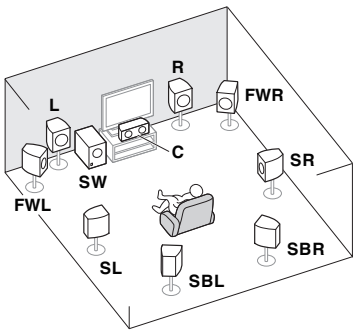


This plan replaces the left and right front height speakers shown in [A] with the left and right front wide speakers (**FWL**/**FWR**).[1]

This surround system produces a true-to-life sound over a wider area.

### [C] 7.1 channel surround system & Speaker B connection

- **Speaker System setting: Speaker B**

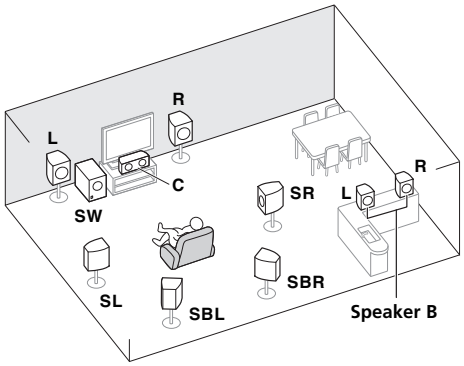


With these connections you can simultaneously enjoy 5.1-channel surround sound in the main zone with stereo playback of the same sound on the B speakers. The same connections also allow for 7.1-channel surround sound in the main zone when not using the B speakers.

### [D] 5.1 channel surround system & Front Bi-amping connection (High quality surround)

- **Speaker System setting: Front Bi-Amp**

Bi-amping connection of the front speakers for high sound quality with 5.1-channel surround sound.

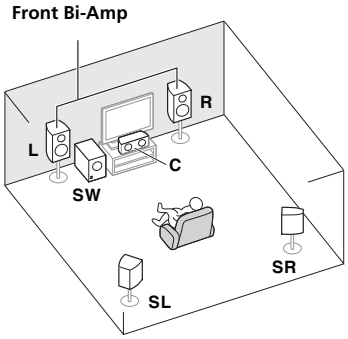


**Note**

1 It is not possible to produce sound simultaneously from the front height or front wide speakers and the surround back speakers.

**[E] 5.1 channel surround system & ZONE 2 connection (Multi Zone)**

- **Speaker System setting: ZONE 2**

With these connections you can simultaneously enjoy 5.1-channel surround sound in the main zone with stereo playback on another component in ZONE 2. (The selection of input devices is limited.)

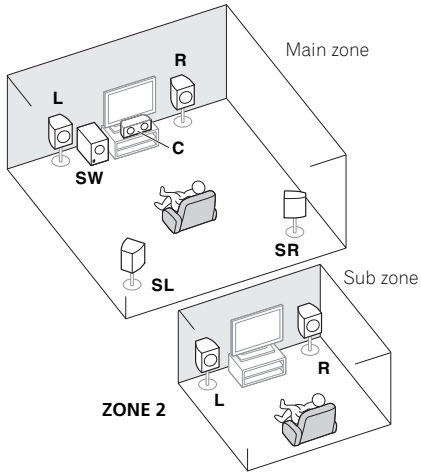


**Important**

- The **Speaker System** setting must be made if you use any of the connections shown above other than [A] (see *Speaker system setting* on page 83).
- Sound does not come through simultaneously from the front height, front wide, speaker B and surround back speakers. Output speakers are different depending on the input signal or listening mode.

### Other speaker connections

- Your favorite speaker connections can be selected even if you have fewer than 5.1 speakers (except front left/right speakers).
- When not connecting a subwoofer, connect speakers with low frequency reproduction capabilities to the front channel. (The subwoofer's low frequency component is played from the front speakers, so the speakers could be damaged.)
- **After connecting, be sure to conduct the Auto MCACC (speaker environment setting) procedure.** See *Automatically conducting optimum sound tuning (Auto MCACC)* on page 37.

## Placing the speakers

Refer to the chart below for placement of the speakers you intend to connect.

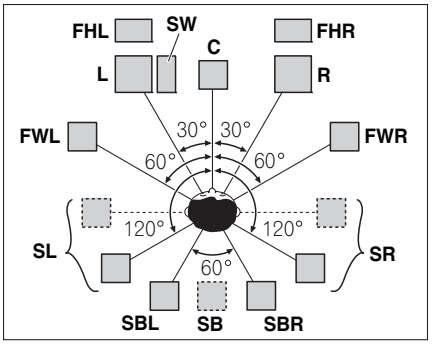


- Place the surround speakers at 120º from the center. If you, (1) use the surround back speaker, and, (2) don't use the front height speakers / front wide speakers, we recommend placing the surround speaker right beside you.
- If you intend to connect only one surround back speaker, place it directly behind you.
- Place the left and right front height speakers at least one meter (3.3 ft.) directly above the left and right front speakers.

### THX speaker system setup

If you are using a THX certified subwoofer, use the **THX INPUT** jack on the subwoofer (if your subwoofer has one) or switch the filter position to **THX** on your subwoofer.

See also *THX Audio Setting* on page 85 to make the settings that will give you the best sound experience when using the Home THX modes (page 53).

### Some tips for improving sound quality

Where you put your speakers in the room has a big effect on the quality of the sound. The following guidelines should help you to get the best sound from your system.

- The subwoofer can be placed on the floor. Ideally, the other speakers should be at about ear-level when you're listening to them. Putting the speakers on the floor (except the subwoofer), or mounting them very high on a wall is not recommended.
- For the best stereo effect, place the front speakers 2 m to 3 m (6 ft. to 9 ft.) apart, at equal distance from the TV.
- If you're going to place speakers around your CRT TV, use shielded speakers or place the speakers at a sufficient distance from your CRT TV.
- If you're using a center speaker, place the front speakers at a wider angle. If not, place them at a narrower angle.

- Place the center speaker above or below the TV so that the sound of the center channel is localized at the TV screen. Also, make sure the center speaker does not cross the line formed by the leading edge of the front left and right speakers.
- It is best to angle the speakers towards the listening position. The angle depends on the size of the room. Use less of an angle for bigger rooms.
- Surround and surround back speakers should be positioned 60 cm to 90 cm (2 ft. to 3 ft.) higher than your ears and tilted slightly downward. Make sure the speakers don't face each other. For DVD-Audio, the speakers should be more directly behind the listener than for home theater playback.
- Try not to place the surround speakers farther away from the listening position than the front and center speakers. Doing so can weaken the surround sound effect.

## Connecting the speakers

Each speaker connection on the receiver comprises a positive (+) and negative (–) terminal. Make sure to match these up with the terminals on the speakers themselves.

**CAUTION**

- These speaker terminals carry **HAZARDOUS LIVE voltage**. To prevent the risk of electric shock when connecting or disconnecting the speaker cables, disconnect the power cord before touching any uninsulated parts.
- Make sure that all the bare speaker wire is twisted together and inserted fully into the speaker terminal. If any of the bare speaker wire touches the back panel it may cause the power to cut off as a safety measure.

### Bare wire connections

1 **Twist exposed wire strands together.** *(fig. A)*

2 **Loosen terminal and insert exposed wire.** *(fig. B)*

3 **Tighten terminal.** *(fig. C)*

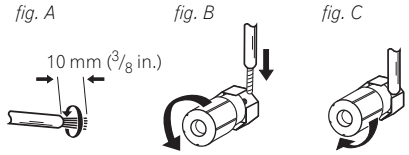


### Banana plug connections

If you want to use speaker cables terminated with banana plugs, screw the speaker terminal fully shut, then plug the banana plug into the end of the speaker terminal.

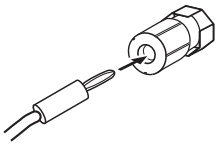

**Important**

- Please refer to the manual that came with your speakers for details on how to connect the other end of the speaker cables to your speakers.
- Use an RCA cable to connect the subwoofer. It is not possible to connect using speaker cables.

**CAUTION**

- Make sure that all speakers are securely installed. This not only improves sound quality, but also reduces the risk of damage or injury resulting from speakers being knocked over or falling in the event of external shocks such as earthquakes.

## Installing your speaker system

At the very least, front left and right speakers only are necessary. Note that your main surround speakers should always be connected as a pair, but you can connect just one surround back speaker if you like (it must be connected to the left surround back terminal).

### Standard surround connection

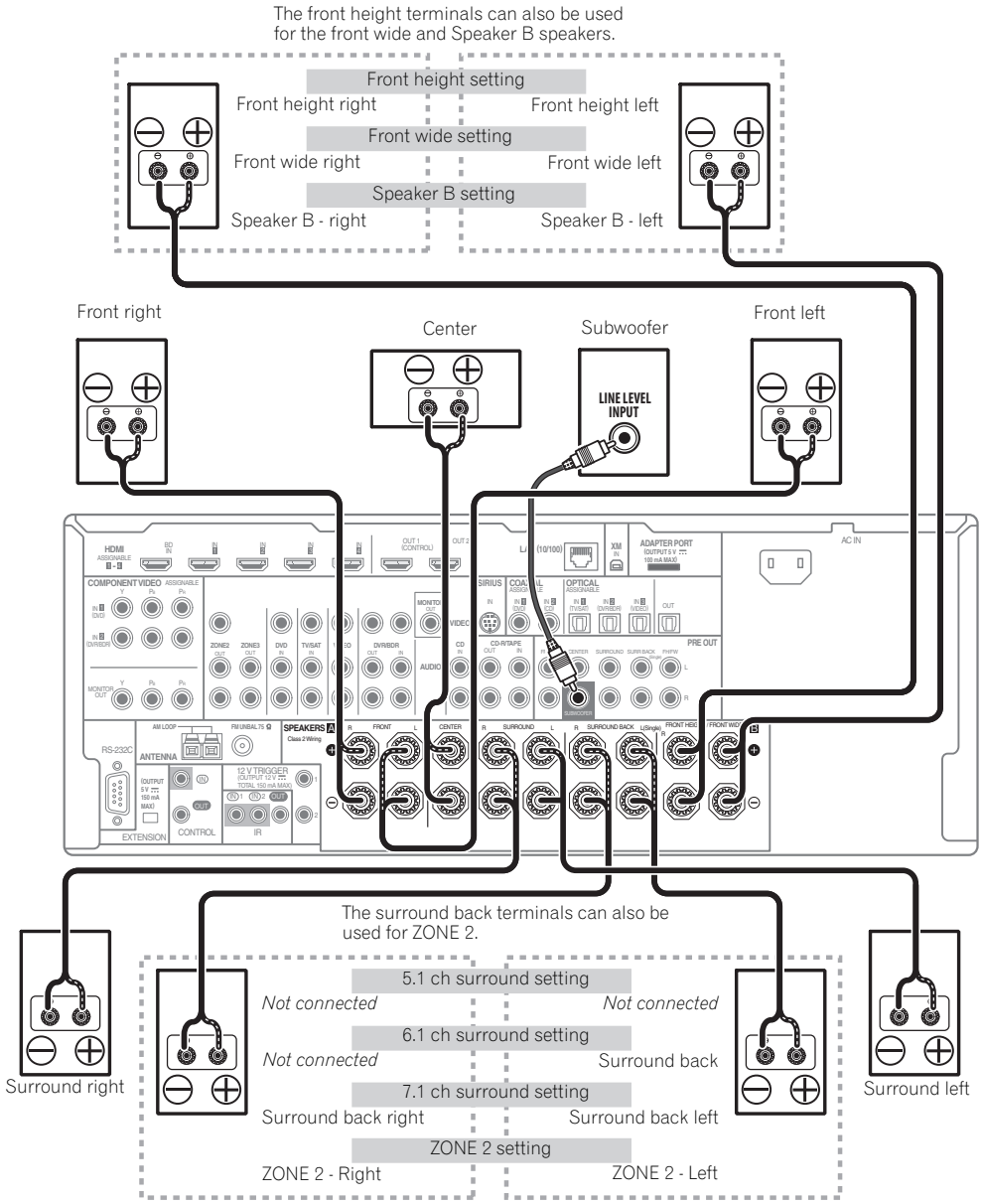

## Bi-amping your speakers

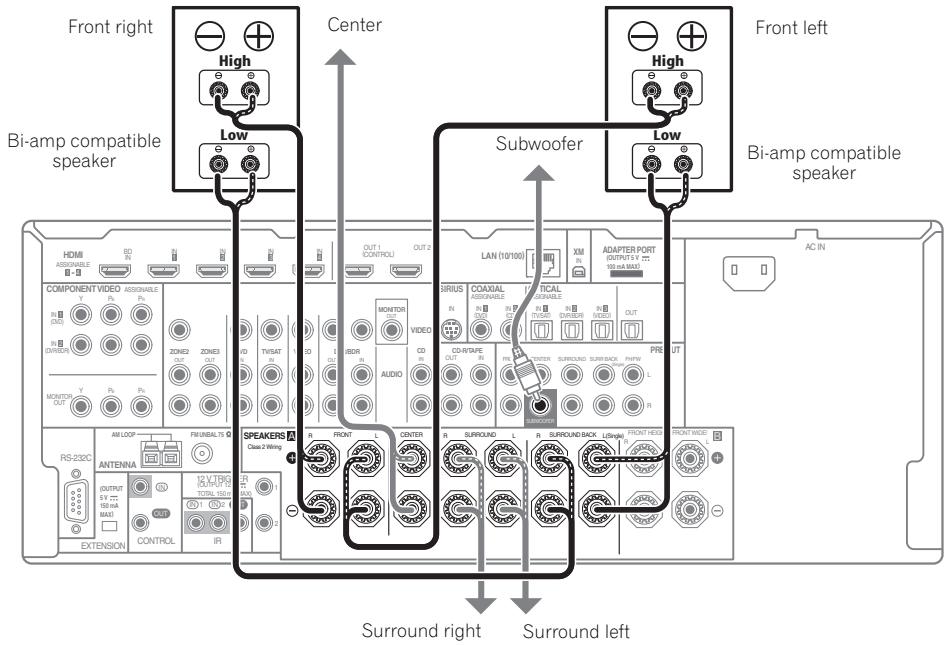


Bi-amping is when you connect the high frequency driver and low frequency driver of your speakers to different amplifiers for better crossover performance. Your speakers must be bi-ampable to do this (having separate terminals for high and low) and the sound improvement will depend on the kind of speakers you're using.

**CAUTION**

- Most speakers with both **High** and **Low** terminals have two metal plates that connect the **High** to the **Low** terminals. These must be removed when you are bi-amping the speakers or you could severely damage the amplifier. See your speaker manual for more information.
- If your speakers have a removable crossover network, make sure you do not remove it for bi-amping. Doing so may damage your speakers.

### Bi-wiring your speakers

Your speakers can also be bi-wired if they support bi-amping.

- With these connections, the **Speaker System** setting makes no difference.
- **To bi-wire a speaker, connect two speaker cords to the speaker terminal on the receiver.**

Using a banana plug for the second connection is recommended.

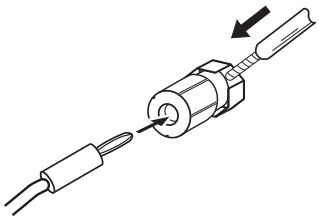

**CAUTION**

- Don't connect different speakers from the same terminal in this way.
- When bi-wiring as well, heed the cautions for bi-amping shown at the left.

## Selecting the Speaker system

The front height terminals can be used for front wide and Speaker B connections, in addition to for the front height speakers. Also, the surround back terminals can be used for bi-amping and ZONE 2 connections, in addition to for the surround back speakers. Make this setting according to the application.

### Front height setup

**Default setting*

**1 Connect a pair of speakers to the front height speaker terminals.**
See *Standard surround connection* on page 20.

**2 If necessary, select 'Normal(SB/FH)' from the Speaker System menu.**
See *Speaker system setting* on page 83 to do this.

### Front wide setup

**1 Connect a pair of speakers to the front height speaker terminals.**
See *Standard surround connection* on page 20.

**2 Select 'Normal(SB/FW)' from the Speaker System menu.**
See *Speaker system setting* on page 83 to do this.

### Speaker B setup

You can listen to stereo playback in another room.

**1 Connect a pair of speakers to the front height speaker terminals.**
See *Standard surround connection* on page 20.

**2 Select 'Speaker B' from the Speaker System menu.**
See *Speaker system setting* on page 83 to do this.

### Bi-Amping setup

Bi-amping connection of the front speakers for high sound quality with 5.1-channel surround sound.

**1 Connect bi-amp compatible speakers to the front and surround back speaker terminals.**
See *Bi-amping your speakers* on page 21.

**2 Select 'Front Bi-Amp' from the Speaker System menu.**
See *Speaker system setting* on page 83 to do this.

### ZONE 2 setup

With these connections you can simultaneously enjoy 5.1-channel surround sound in the main zone with stereo playback on another component in ZONE 2.

**1 Connect a pair of speakers to the surround back speaker terminals.**
See *Standard surround connection* on page 20.

**2 Select 'ZONE 2' from the Speaker System menu.**
See *Speaker system setting* on page 83 to do this.

## About the audio connection

| | Types of cables and terminals | Transferable audio signals |
|---|---|---|
| ⬆ Sound signal priority | HDMI 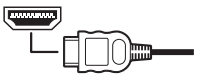 | HD audio |
| | Digital (Coaxial) 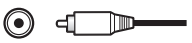 Digital (Optical) 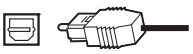 | Conventional digital audio |
| | RCA (Analog) *(White/Red)* 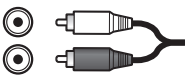 | Conventional analog audio |

- With an HDMI cable, video and audio signals can be transferred in high quality over a single cable.

## About the video converter

The video converter ensures that all video sources are output through all of the **MONITOR VIDEO OUT** jacks. The only exception is HDMI: since this resolution cannot be downsampled, you must connect your monitor/TV to the receiver's HDMI video outputs when connecting this video source.[1]

**Note**

1 • If the video signal does not appear on your TV, try adjusting the resolution settings on your component or display. Note that some components (such as video game units) have resolutions that may not be converted. In this case, try switching Digital Video Conversion (in *Setting the Video options* on page 61) **OFF**.
• The signal input resolutions that can be converted from the component video input for the HDMI output are 480i/576i, 480p/576p, 720p and 1080i. 1080p signals cannot be converted.
• Only signals with an input resolution of 480i/576i can be converted from the component video input for the composite **MONITOR OUT** terminals.

If several video components are assigned to the same input function (see *The Input Setup menu* on page 39), the converter gives priority to HDMI, component, then composite (in that order).

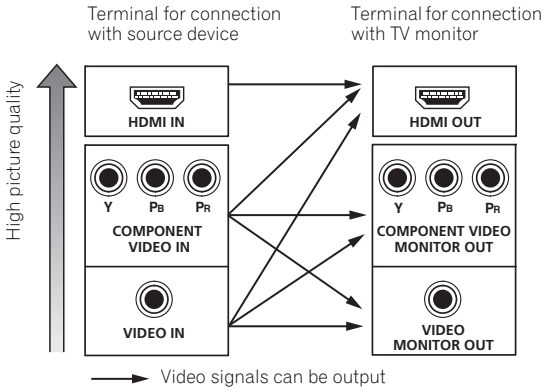


- For optimal video performance, THX recommends switching Digital Video Conversion (in *Setting the Video options* on page 61) **OFF**.

*This product incorporates copyright protection technology that is protected by U.S. patents and other intellectual property rights. Use of this copyright protection technology must be authorized by Rovi Corporation, and is intended for home and other limited viewing uses only unless otherwise authorized by Rovi Corporation. Reverse engineering or disassembly is prohibited.*

## About HDMI[1]

The HDMI connection transfers uncompressed digital video, as well as almost every kind of digital audio.

This receiver incorporates High-Definition Multimedia Interface (HDMI®) technology.

This receiver supports the functions described below through HDMI connections.[2]

- Digital transfer of uncompressed video (contents protected by HDCP (1080p/24, 1080p/60, etc.))
- 3D signal transfer[3]
- Deep Color signal transfer[3]
- x.v.Color signal transfer[3]
- Audio Return Channel[3]
- Input of multi-channel linear PCM digital audio signals (192 kHz or less) for up to 8 channels
- Input of the following digital audio formats:[4]
  – Dolby Digital, Dolby Digital Plus, DTS, High bitrate audio (Dolby TrueHD, DTS-HD Master Audio, DTS-HD High Resolution Audio), DVD-Audio, CD, SACD (DSD signal), Video CD, Super VCD
- Synchronized operation with components using the **Control** with HDMI function (see *Control with HDMI function* on page 56)

*HDMI, the HDMI logo and High-Definition Multimedia Interface are trademarks or registered trademarks of HDMI Licensing, LLC in the United States and other countries.*

*"x.v.Color" and x.v.Color logo are trademarks of Sony Corporation.*

**Note**

1 • An HDMI connection can only be made with DVI-equipped components compatible with both DVI and High Bandwidth Digital Content Protection (HDCP). If you choose to connect to a DVI connector, you will need a separate adaptor (DVI→HDMI) to do so. A DVI connection, however, does not support audio signals. Consult your local audio dealer for more information.
• If you connect a component that is not compatible with HDCP, an **HDCP ERROR** message is displayed on the front panel display. Some components that are compatible with HDCP still cause this message to be displayed, but so long as there is no problem with displaying video this is not a malfunction.
• Depending on the component you have connected, using a DVI connection may result in unreliable signal transfers.
• This receiver supports SACD, Dolby Digital Plus, Dolby TrueHD and DTS-HD Master Audio. To take advantage of these formats, however, make sure that the component connected to this receiver also supports the corresponding format.

2 • Use a High Speed HDMI® cable. If an HDMI cable other than a High Speed HDMI® cable is used, it may not work properly.
• When an HDMI cable with a built-in equalizer is connected, it may not operate properly.

3 Signal transfer is only possible when connected to a compatible component.

4 • HDMI format digital audio transmissions require a longer time to be recognized. Due to this, interruption in the audio may occur when switching between audio formats or beginning playback.
• Turning on/off the device connected to this unit's HDMI OUT terminal during playback, or disconnecting/connecting the HDMI cable during playback, may cause noise or interrupted audio.

## Connecting your TV and playback components

### Connecting using HDMI

If you have an HDMI or DVI (with HDCP) equipped component (Blu-ray disc player (BD), etc.), you can connect it to this receiver using a commercially available HDMI cable.

If the TV and playback components support the **Control** with HDMI feature, the convenient **Control** with HDMI functions can be used (see *Control with HDMI function* on page 56).

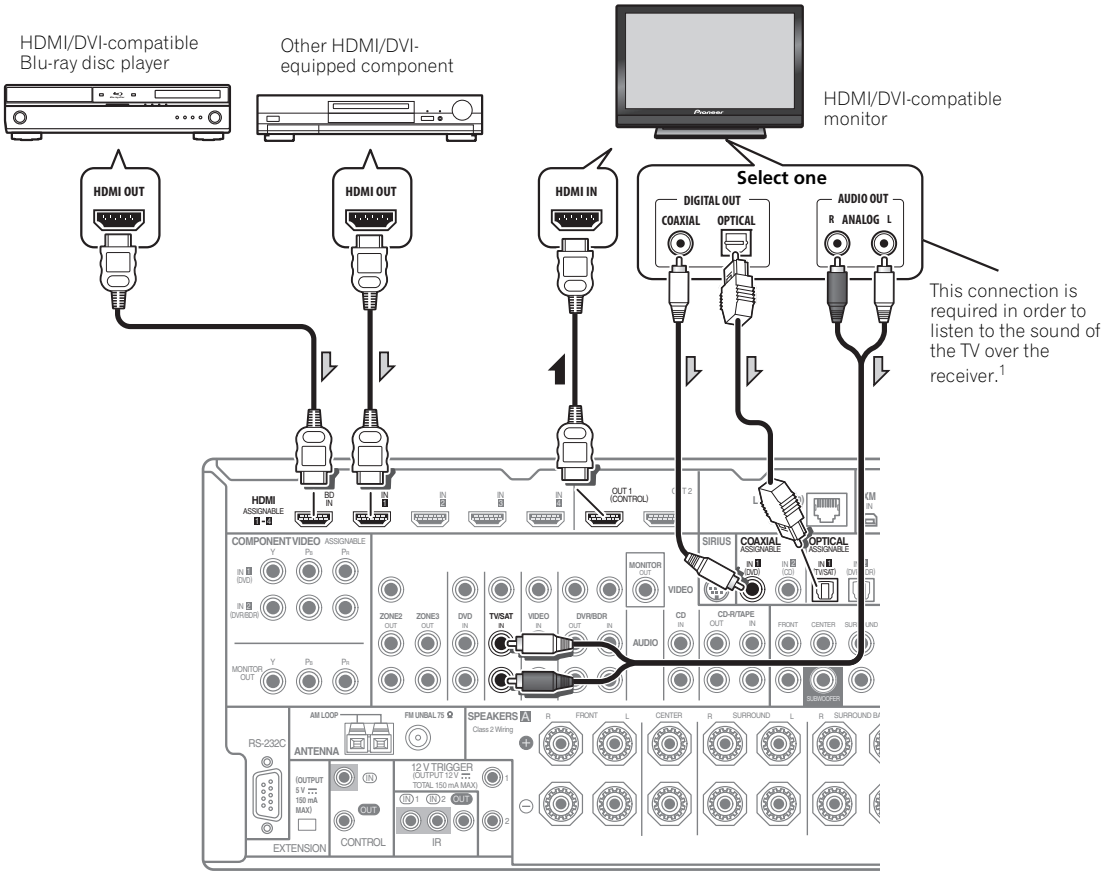


- *VSX-1325 only:* When connecting to an HDMI/DVI-compatible monitor using the **HDMI OUT 2** terminal, switch the HDMI output setting to **HDMI OUT 2** or **HDMI OUT ALL**. See *Switching the HDMI output (VSX-1325 only)* on page 64.
- For input components, connections other than HDMI connections are also possible (see *Connecting your DVD player with no HDMI output* on page 25).
- If you want to listen to the sound of the TV over the receiver, connect the receiver and TV with audio cables.[1]

**Note**

1 When the TV and receiver are connected by HDMI connections, if the TV supports the HDMI Audio Return Channel function, the sound of the TV is input to the receiver via the HDMI terminal, so there is no need to connect an audio cable. In this case, set **TV Audio** at **HDMI Setup** to **via HDMI** (see *HDMI Setup* on page 56).

## Connecting your DVD player with no HDMI output

This diagram shows connections of a TV (with HDMI input) and DVD player (or other playback component with no HDMI output) to the receiver.

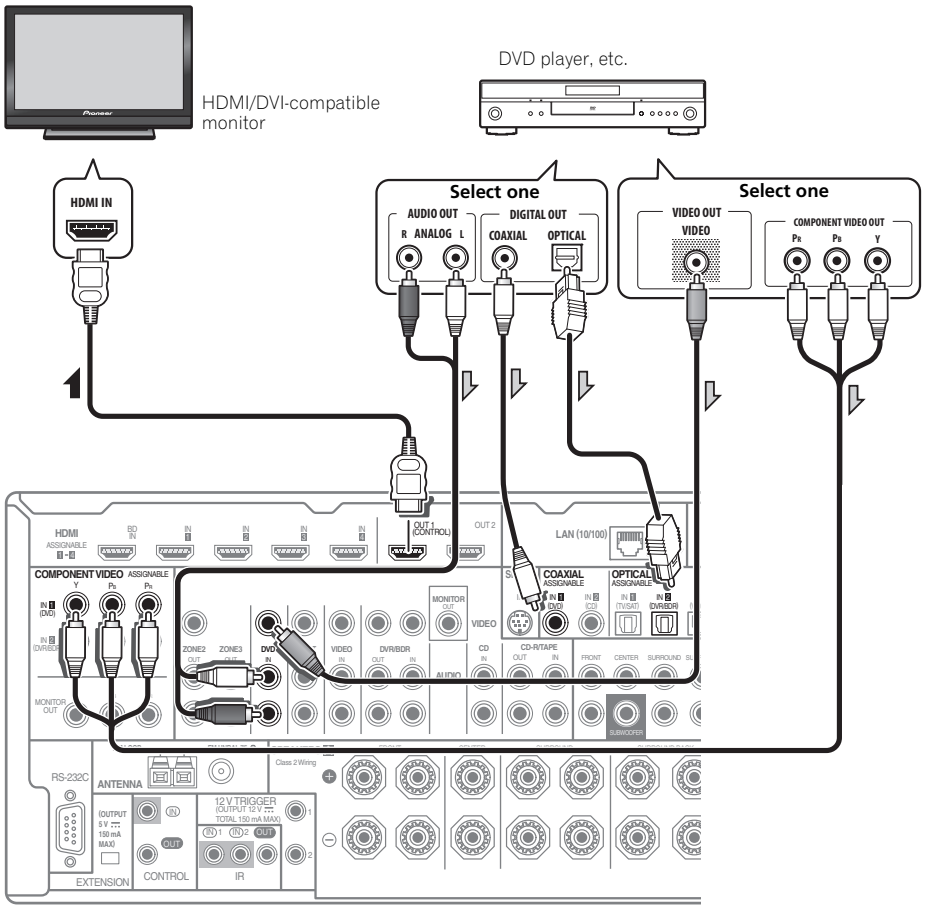


- If you want to listen to the sound of the TV over the receiver, connect the receiver and TV with audio cables (page 24).[1]
- If you use an optical digital audio cable, you'll need to tell the receiver which digital input you connected the player to (see *The Input Setup menu* on page 39).

**Note**

1 When the TV and receiver are connected by HDMI connections, if the TV supports the HDMI Audio Return Channel function, the sound of the TV is input to the receiver via the HDMI terminal, so there is no need to connect an audio cable. In this case, set **TV Audio** at **HDMI Setup** to **via HDMI** (see *HDMI Setup* on page 56).

## Connecting your TV with no HDMI input

This diagram shows connections of a TV (with no HDMI input) and DVD player (or other playback component) to the receiver.

- With these connections, the picture is not output to the TV even if the DVD player is connected with an HDMI cable. Connect the DVD player's video signals using a composite or component cord.

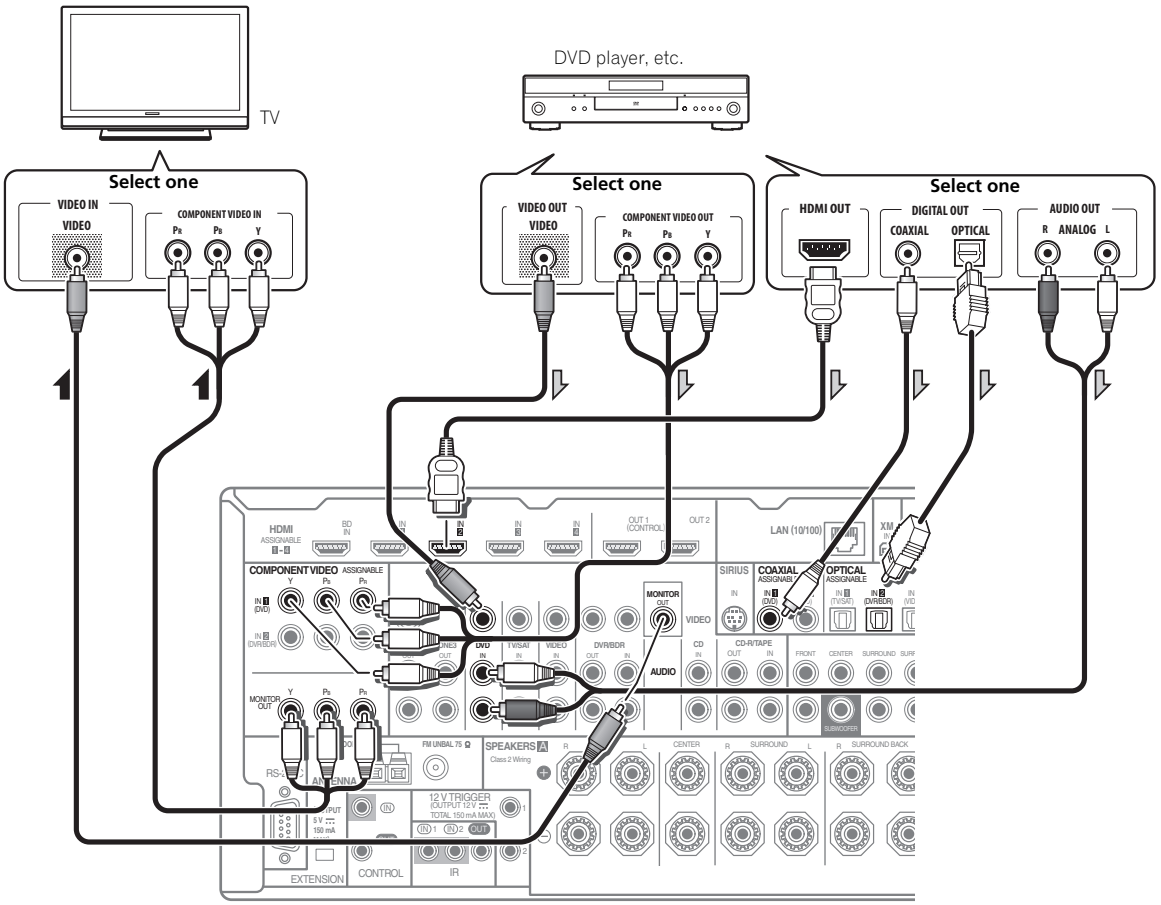


- Connect using an HDMI cable to listen to HD audio on the receiver. Do not use an HDMI cable to input video signals.
  Depending on the video component, it may not be possible to output signals connected by HDMI and other methods simultaneously, and it may be necessary to make output settings. Please refer to the operating instructions supplied with your component for more information.
- If you want to listen to the sound of the TV over the receiver, connect the receiver and TV with audio cables (page 24).
- If you use an optical digital audio cable, you'll need to tell the receiver which digital input you connected the player to (see *The Input Setup menu* on page 39).

## Connecting an HDD/DVD recorder, BD recorder and other video sources

This receiver has two sets of audio/video inputs and outputs suitable for connecting analog or digital video devices, including HDD/DVD recorders and BD recorders.

When you set up the receiver you'll need to tell the receiver which input you connected the recorder to (see also *The Input Setup menu* on page 39).

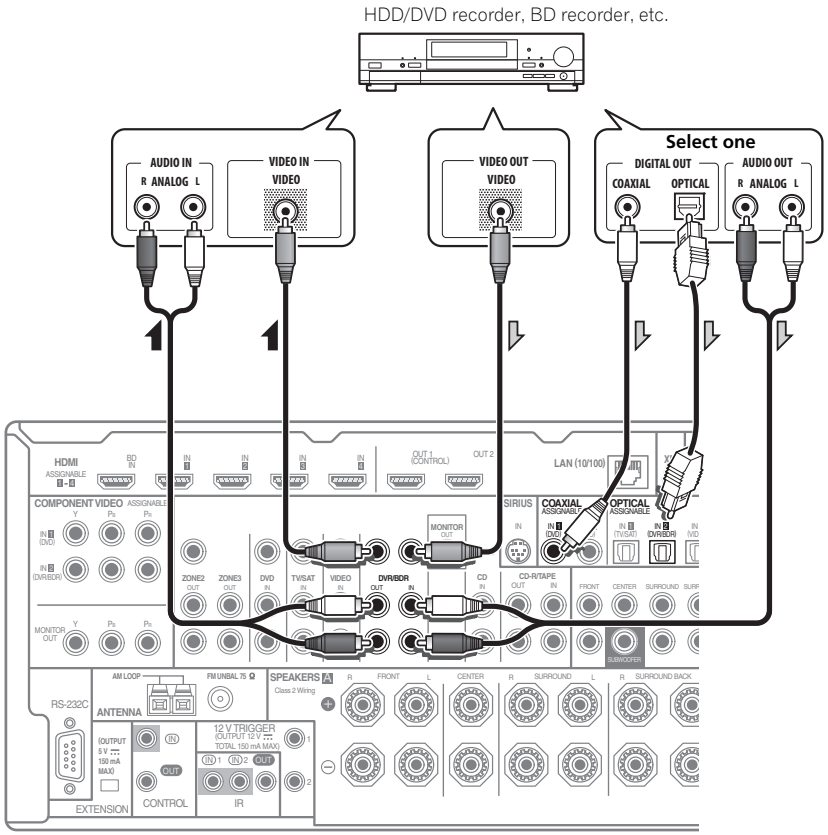


- In order to record, you must connect the analog audio cables (the digital connection is for playback only) (page 63).
- If your HDD/DVD recorder, BD recorder, etc., is equipped with an HDMI output terminal, we recommend connecting it to the receiver's **HDMI IN** terminal. When doing so, also connect the receiver and TV by HDMI (see *Connecting using HDMI* on page 24).

## Connecting a satellite/cable receiver or other set-top box

Satellite and cable receivers, and terrestrial digital TV tuners are all examples of so-called 'set-top boxes'.

When you set up the receiver you'll need to tell the receiver which input you connected the set-top box to (see *The Input Setup menu* on page 39).

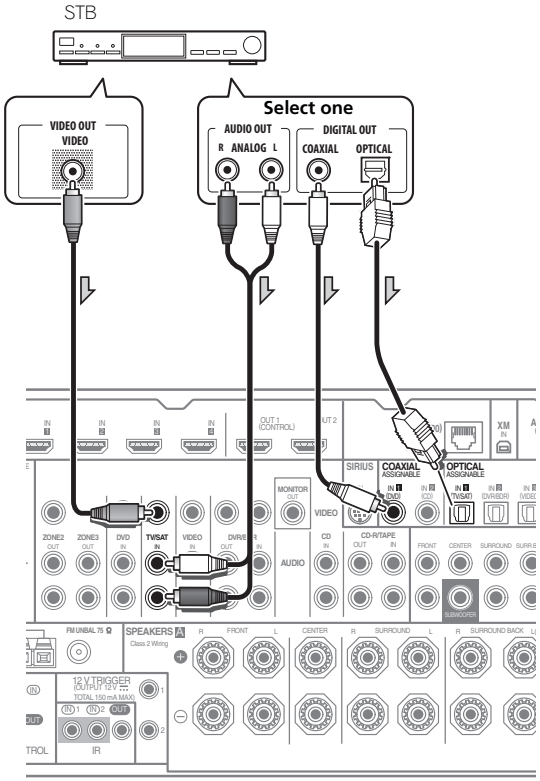


- If your set-top box is equipped with an HDMI output terminal, we recommend connecting it to the receiver's **HDMI IN** terminal. When doing so, also connect the receiver and TV by HDMI (see *Connecting using HDMI* on page 24).

## Connecting other audio components

This receiver has both digital and analog inputs, allowing you to connect audio components for playback.

When you set up the receiver you'll need to tell the receiver which input you connected the component to (see also *The Input Setup menu* on page 39).

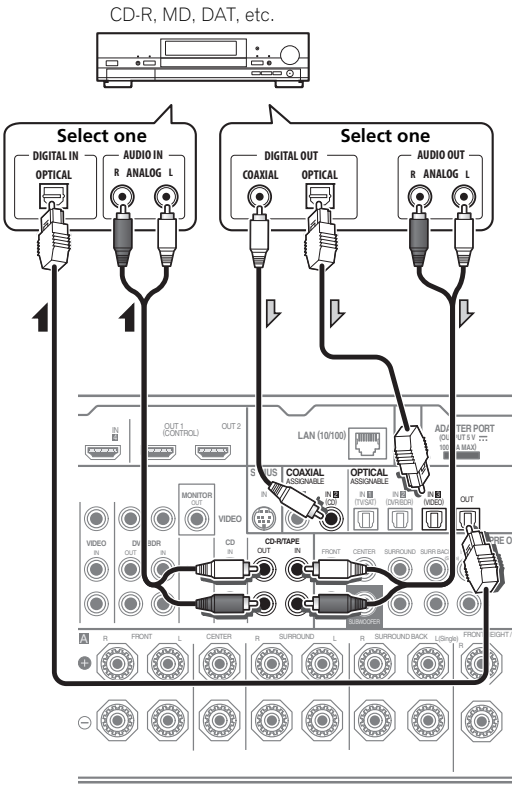


- If your turntable has line-level outputs (i.e., it has a built-in phono pre-amp), connect it to the **CD** inputs instead.
- If you're connecting a recorder, connect the analog audio outputs to the analog audio inputs on the recorder.
- You can't hear HDMI audio through this receiver's digital out jack.

### About the WMA9 Pro decoder

This unit has an on-board Windows Media™ Audio 9 Professional[1] (WMA9 Pro) decoder, so it is possible to playback WMA9 Pro-encoded audio using HDMI, coaxial or optical digital connection when connected to a WMA9 Pro-compatible player. However, the connected DVD player, set-top box, etc. must be able to output WMA9 Pro format audio signals through a coaxial or optical digital output.

## Connecting additional amplifiers

This receiver has more than enough power for any home use, but it's possible to add additional amplifiers to every channel of your system using the pre-outs. Make the connections shown below to add amplifiers to power your speakers.

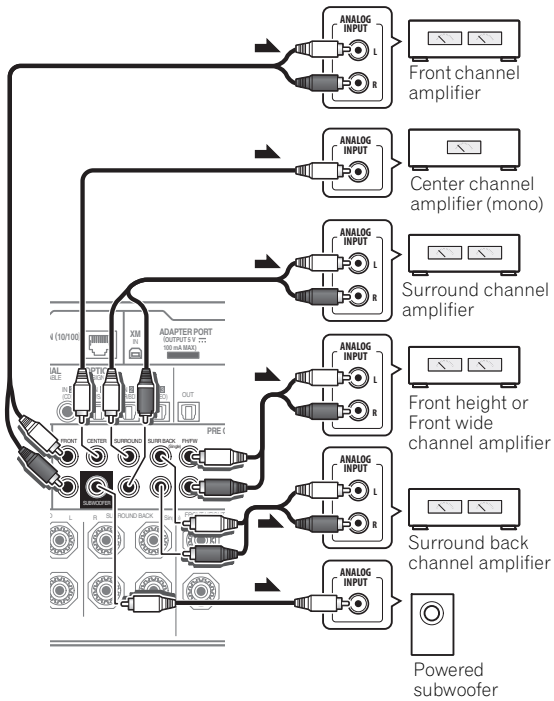


- You can use the additional amplifier on the surround back channel pre-outs for a single speaker as well. In this case plug the amplifier into the left (**L (Single)**) terminal only.
- The sound from the surround back terminals will depend on how you have configured the *Speaker system setting* on page 83.
- To hear sound only from the pre-outs, switch the speaker system to **OFF**, or simply disconnect any speakers that are connected directly to the receiver.

If you're not using a subwoofer, change the front speaker setting (see *Speaker Setting* on page 83) to **LARGE**.

**Note**

1 • *Windows Media and the Windows logo are trademarks or registered trademarks of Microsoft Corporation in the United States and/or other countries.*

• With WMA9 Pro, sound problems may occur depending on your computer system. Note that WMA9 Pro 96 kHz sources will be downsampled to 48 kHz.

## Connecting AM/FM antennas

Connect the AM loop antenna and the FM wire antenna as shown below. To improve reception and sound quality, connect external antennas (see *Connecting external antennas* below).

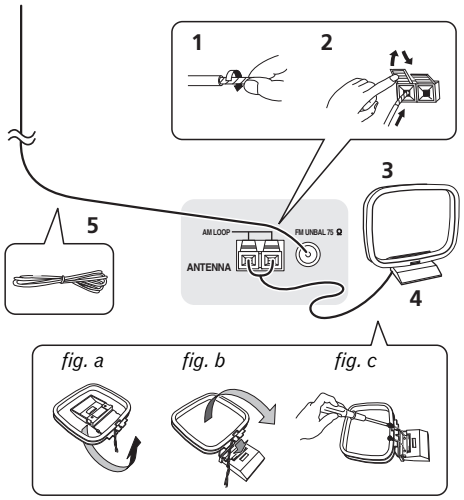


**1 Pull off the protective shields of both AM antenna wires.**

**2 Push open the tabs, then insert one wire fully into each terminal, then release the tabs to secure the AM antenna wires.**

**3 Fix the AM loop antenna to the attached stand.**
To fix the stand to the antenna, bend in the direction indicated by the arrow (*fig. a*) then clip the loop onto the stand (*fig. b*).

- If you plan to mount the AM antenna to a wall or other surface, secure the stand with screws (*fig. c*) before clipping the loop to the stand. Make sure the reception is clear.

**4 Place the AM antenna on a flat surface and in a direction giving the best reception.**

**5 Connect the FM wire antenna into the FM antenna socket.**
For best results, extend the FM antenna fully and fix to a wall or door frame. Don't drape loosely or leave coiled up.

### Connecting external antennas

To improve FM reception, connect an external FM antenna to **FM UNBAL 75 Ω**.

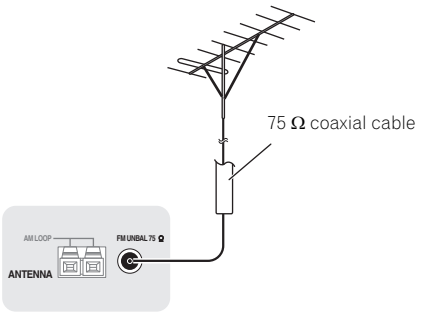


To improve AM reception, connect a 5 m to 6 m (16 ft. to 20 ft.) length of vinyl-coated wire to the **AM LOOP** terminals without disconnecting the supplied AM loop antenna.

For the best possible reception, suspend horizontally outdoors.

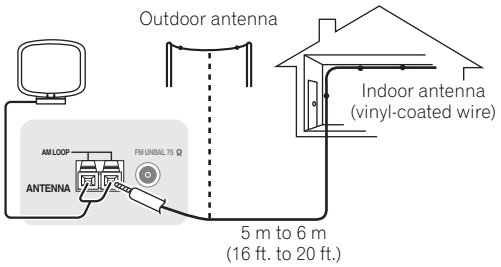


## MULTI-ZONE setup

This receiver can power up to three (VSX-1325)/two (VSX-1125) independent systems in separate rooms after you have made the proper MULTI-ZONE connections. Different sources can be playing in three (VSX-1325)/two (VSX-1125) zones at the same time or, depending on your needs, the same source can also be used. The main and sub zones have independent power (the main zone power can be off while one (or both) of the sub zones is on) and the sub zones can be controlled by the remote or front panel controls.

**Important**

- The explanations for ZONE 3 below only apply to the VSX-1325.

## Making MULTI-ZONE connections

It is possible to make these connections if you have a separate TV and speakers for your primary (**ZONE 2**) sub zone, and a separate amplifier (and speakers) for your secondary (**ZONE 3**) sub zone. You will also need a separate amplifier if you are not using the *MULTI-ZONE setup using speaker terminals (ZONE 2)* below for your primary sub zone. There are two primary sub zone setups possible with this system. Choose whichever works best for you.

### MULTI-ZONE listening options

The following table shows the signals that can be output to ZONE 2 and ZONE 3:

| Sub Zone | Input functions available |
|---|---|
| **ZONE 2** | DVD, TV/SAT, DVR/BDR, VIDEO, INTERNET RADIO, iPod/USB, XM[a], CD, CD-R/TAPE, TUNER, ADAPTER PORT, SIRIUS<br>(Outputs analog audio and composite video.) |
| **ZONE 3** | DVD, TV/SAT, DVR/BDR, VIDEO, CD, CD-R/TAPE, TUNER, ADAPTER PORT<br>(Outputs analog audio.) |

a. VSX-1325 only.

### Basic MULTI-ZONE setup (ZONE 2)

- **Connect a separate amplifier to the AUDIO ZONE 2 OUT jacks and a TV monitor to the VIDEO ZONE 2 OUT jack, both on this receiver.**

You should have a pair of speakers attached to the sub zone amplifier as shown in the following illustration.

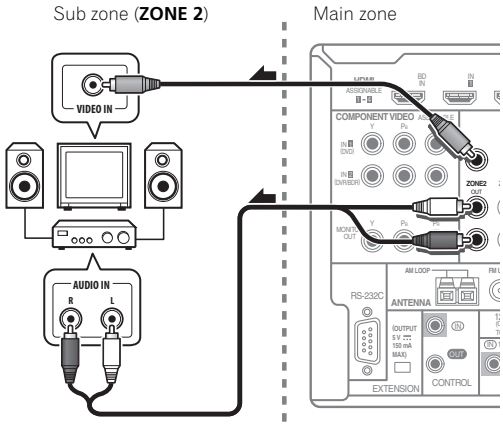


### MULTI-ZONE setup using speaker terminals (ZONE 2)

You must select **ZONE 2** in *Speaker system setting* on page 83 to use this setup.

- **Connect a TV monitor to the VIDEO ZONE 2 OUT jacks on this receiver.**

You should have a pair of speakers attached to the surround back speaker terminals as shown below.

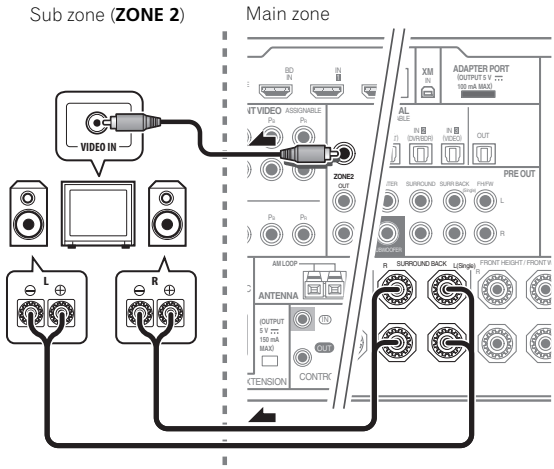


### Secondary MULTI-ZONE setup (ZONE 3)

- **Connect a separate amplifier to the AUDIO ZONE 3 OUT jacks on this receiver.**

You should have a pair of speakers attached to the sub zone amplifier as shown in the following illustration.

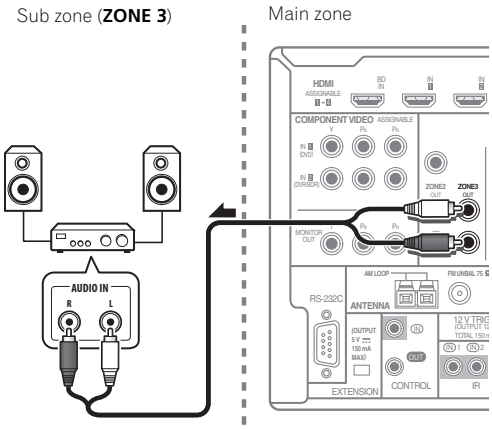

## Connecting to the network through LAN interface

By connecting this receiver to the network via the LAN terminal, you can listen to Internet radio stations.[1]

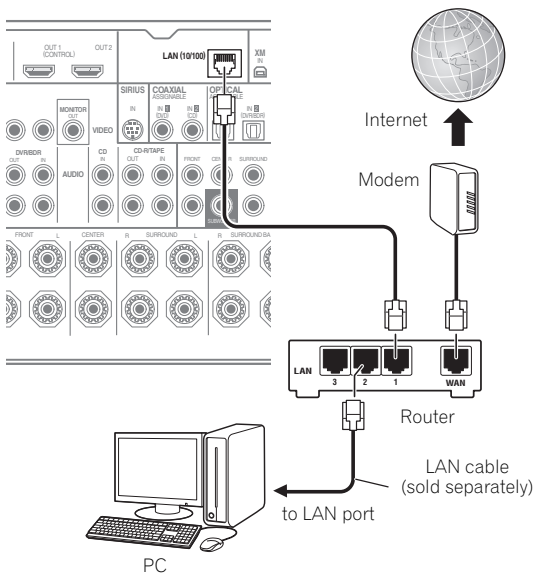


Connect the LAN terminal on this receiver to the LAN terminal on your router (with or without the built-in DHCP server function) with a straight LAN cable (CAT 5 or higher).

Turn on the DHCP server function of your router. In case your router does not have the built-in DHCP server function, it is necessary to set up the network manually. For details, see *Network Setup menu* on page 85.

### LAN terminal specifications

LAN terminal . . . . . Ethernet jack
10BASE-T/100BASE-TX

## Connecting Optional *Bluetooth*® ADAPTER

When the *Bluetooth* ADAPTER (Pioneer Model No. AS-BT100)[2] is connected to this receiver, a product equipped with *Bluetooth* wireless technology (portable cell phone, digital music player, etc.) can be used to listen to music wirelessly.[3]

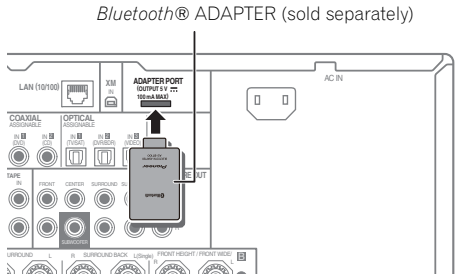


- **Switch the receiver into standby and connect *Bluetooth* ADAPTER to the ADAPTER PORT.**
- For instructions on playing the *Bluetooth* wireless technology device, see *Pairing the Bluetooth ADAPTER and Bluetooth wireless technology device* on page 50.

**Important**

- Do not move the receiver with the *Bluetooth* ADAPTER connected. Doing so could cause damage or faulty contact.

## Connecting an HDMI-equipped component to the front panel input

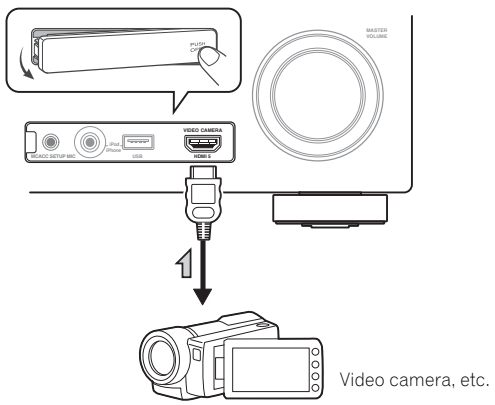


**Note**

1 To listen to Internet radio stations, you must sign a contract with an ISP (Internet Service Provider) beforehand.
2 The *Bluetooth* ADAPTER (AS-BT100) is sold separately.
3 • The *Bluetooth* wireless technology enabled device must support A2DP profiles.
• Pioneer does not guarantee proper connection and operation of this unit with all *Bluetooth* wireless technology enabled devices.

## Connecting an XM Radio tuner

*(VSX-1325 only)*

After purchasing an XM Mini-Tuner and Home Dock (both sold separately), you will also need to activate the XM Radio service to begin receiving broadcasts.

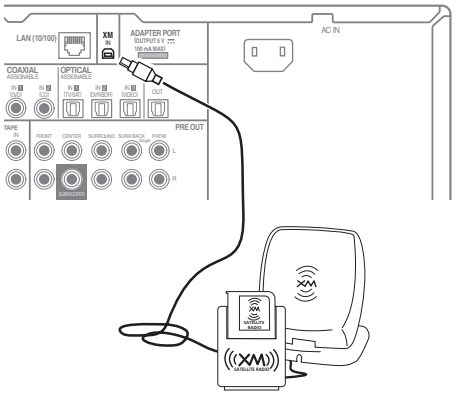


XM Mini-Tuner and Home Dock with antenna

- For instructions on playing the XM Radio, see *Listening to XM Radio (VSX-1325 only)* on page 47.

## Connecting a SiriusConnect™ tuner

To receive SIRIUS Satellite Radio broadcasts, you will need to activate your SiriusConnect™ tuner.

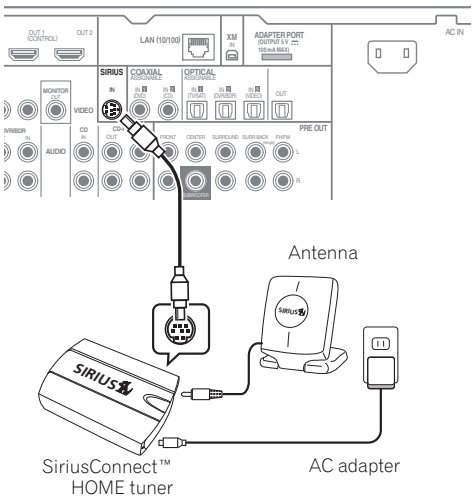


You will also need to connect the antenna and AC adapter to the SiriusConnect™ tuner.

For instructions on playing the SIRIUS Radio, see *Listening to SIRIUS Radio* on page 48.

## Connecting an iPod

This receiver has a dedicated iPod terminal that will allow you to control playback of audio content from your iPod using the controls of this receiver.

- **Switch the receiver into standby then use the supplied iPod cable to connect your iPod to the iPod/iPhone/USB terminal on the front panel of this receiver.**
  - It is also possible to connect using the cable included with the iPod, but in this case it is not possible to view pictures via the receiver.
  - For the cable connection, also refer to the operating instructions for your iPod.
  - For instructions on playing the iPod, see *Playing an iPod* on page 41.

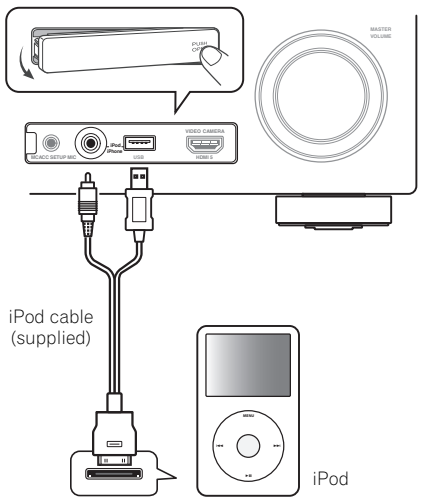

## Connecting a USB device

It is possible to play audio and photo files by connecting USB devices to this receiver. It is also possible to connect a USB keyboard (US-international layout) to the receiver to enter text in the following GUI screens.

- Change the input name in the **Input Setup** menu (page 39).
- Add names to radio station presets (page 45).
- Enter Internet radio station URLs (page 46).

- **Switch the receiver into standby then connect your USB device to the USB terminal on the front panel of this receiver.**[1]
  - For instructions on playing the USB device, see *Playing a USB device* on page 42.

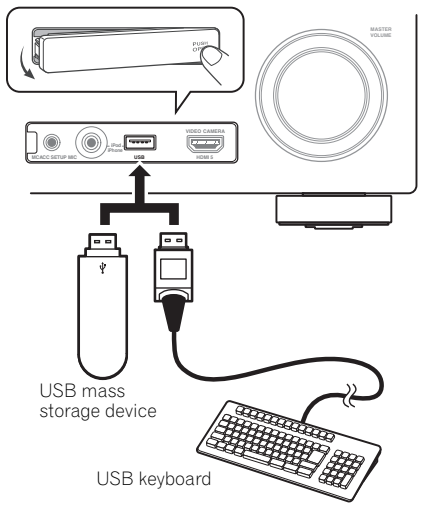


## Connecting a USB device for Advanced MCACC output

When using Auto MCACC (page 73) or Acoustic Calibration EQ Professional (page 77) to calibrate the reverb characteristics of your listening room, the 3D graphs of the reverb characteristics in your listening room (before and after calibration) can be checked on a computer screen.

The various MCACC parameters can also be checked on the computer. MCACC data and parameters are transferred from this receiver to a USB device and by connecting the USB device to a computer, the data is imported via the MCACC software in the computer.

The MCACC software to output the results is available from the support area of the Pioneer website (http://www.pioneerelectronics.com/PUSA/Home+Entertainment+Custom+Install). Instructions for using the software are also available here. If you have any questions regarding, please contact the Customer Support Division of Pioneer.

See the documentation provided with the Advanced MCACC PC Display Application Software for more information.

- For the USB device connection and operations, see *Output MCACC data* on page 80[2].

**Note**

1 This receiver does not support a USB hub.

2 The various parameters and the reverb characteristics data used for display on the computer are not cleared when the power is turned off (see *Output MCACC data* on page 80).

## Connecting an IR receiver

If you keep your stereo components in a closed cabinet or shelving unit, or you wish to use the sub zone remote control in another zone, you can use an optional IR receiver (such as a Niles or Xantech unit) to control your system instead of the remote sensor on the front panel of this receiver.[1]

**1 Connect the IR receiver sensor to the IR IN jack on the rear of this receiver.**

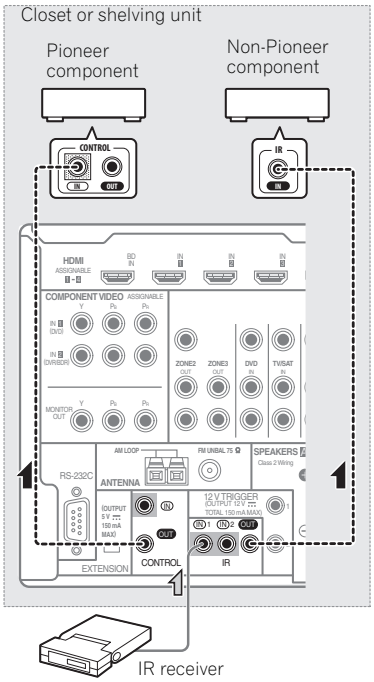


**2 Connect the IR IN jack of another component to the IR OUT jack on the rear of this receiver to link it to the IR receiver.**

Please see the manual supplied with your IR receiver for the type of cable necessary for the connection.

- If you want to link a Pioneer component to the IR receiver, see *Operating other Pioneer components with this unit's sensor* below to connect to the **CONTROL** jacks instead of the **IR OUT** jack.

## Operating other Pioneer components with this unit's sensor

Many Pioneer components have **SR CONTROL** jacks which can be used to link components together so that you can use just the remote sensor of one component. When you use a remote control, the control signal is passed along the chain to the appropriate component.[2]

### Important

- Note that if you use this feature, *make sure that you also have at least one set of analog audio, video or HDMI jacks connected* to another component for grounding purposes.

**1 Decide which component you want to use the remote sensor of.**

When you want to control any component in the chain, this is the remote sensor at which you'll point the corresponding remote control.

**2 Connect the CONTROL OUT jack of that component to the CONTROL IN jack of another Pioneer component.**

Use a cable with a mono mini-plug on each end for the connection.

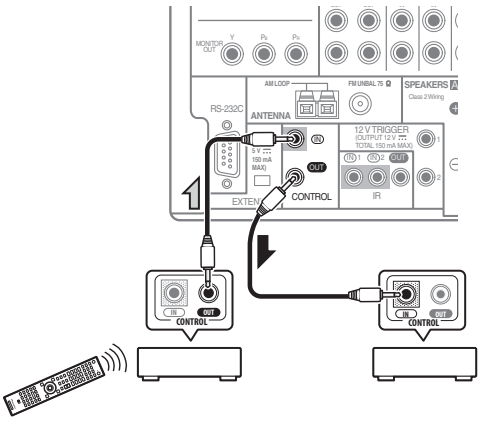


Continue the chain in the same way for as many components as you have.

**Note**

1 • Remote operation may not be possible if direct light from a strong fluorescent lamp is shining on the IR receiver remote sensor window.
• Note that other manufacturers may not use the IR terminology. Refer to the manual that came with your component to check for IR compatibility.
• If using two remote controls (at the same time), the IR receiver's remote sensor takes priority over the remote sensor on the front panel.

2 • If you want to control all your components using this receiver's remote control, see *Setting the remote to control other components* on page 66.
• If you have connected a remote control to the **CONTROL IN** jack (using a mini-plug cable), you won't be able to control this unit using the remote sensor.

## Switching components on and off using the 12 volt trigger

*(VSX-1325 only)*

You can connect components in your system (such as a screen or projector) to this receiver so that they switch on or off using 12 volt triggers when you select an input function. However, you must specify which input functions switch on the trigger using the *The Input Setup menu* on page 39. Note that this will only work with components that have a standby mode.

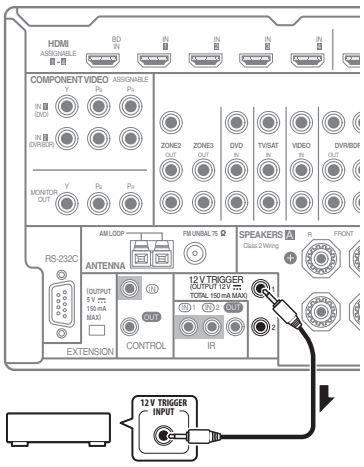


- **Connect the 12 V TRIGGER jack of this receiver to the 12 V trigger of another component.**

Use a cable with a mono mini-plug on each end for the connection.

After you've specified the input functions that will switch on the trigger, you'll be able to switch the component on or off just by pressing the input function(s) you've set on page 39.

It is also possible to have the component switch not when the input function is switched, but when **HDMI OUT** is switched. For details, see *HDMI Setup* on page 56.

## Plugging in the receiver

Only plug in after you have connected all your components to this receiver, including the speakers.

**1 Plug the supplied power cord into the AC IN socket on the back of the receiver.**

**2 Plug the other end into a power outlet.[1]**

**CAUTION**

- Handle the power cord by the plug part. Do not pull out the plug by tugging the cord, and never touch the power cord when your hands are wet, as this could cause a short circuit or electric shock. Do not place the unit, a piece of furniture, or other object on the power cord or pinch the cord in any other way. Never make a knot in the cord or tie it with other cables. The power cords should be routed so that they are not likely to be stepped on. A damaged power cord can cause a fire or give you an electric shock. Check the power cord once in a while. If you find it damaged, ask your nearest Pioneer authorized independent service company for a replacement.
- Do not use any power cord other than the one supplied with this unit.
- Do not use the supplied power cord for any purpose other than that described below.
- The receiver should be disconnected by removing the mains plug from the wall socket when not in regular use, e.g., when on vacation.
- Make sure the blue ⏻ **STANDBY/ON** light has gone out before unplugging.
- If you have connected speakers with a 6 Ω impedance, change the impedance setting before turning on the power.

**Note**

1 After this receiver is connected to an AC outlet, a 2 second to 10 second HDMI initialization process begins. You cannot carry out any operations during this process. The **HDMI** indicator in the front panel display blinks during this process, and you can turn on this receiver once it has stopped blinking. When you set the **Control** with HDMI to **OFF**, you can skip this process. For details about the **Control** with HDMI feature, see *Control with HDMI function* on page 56.

# Chapter 4:
# Basic Setup

## Switching the speaker impedance

We recommend using speakers of 8 Ω with this system, but it is possible to switch the impedance setting if you plan to use speakers with a 6 Ω impedance rating.

**1 Switch the receiver into standby.**

**2 While holding down ENTER on the front panel, press ⏻ STANDBY/ON.**
The display shows **RESET ◄ NO ►**.

Use **TUNE ↑/↓** (or ↑/↓ on the remote control) to select **SPEAKER ◄ 8Ω ►**, and then use **PRESET ←/→** (or ←/→ on the remote control) to select **SPEAKER 8Ω** or **SPEAKER 6Ω**.

- **SPEAKER 8Ω** – Use this setting if your speakers are rated at 8 Ω or more.
- **SPEAKER 6Ω** – Use this setting if your speakers are rated at 6 Ω.

## Changing the OSD display language (OSD Language)

The language used on the Graphical User Interface screen can be changed.

- The explanations in these operating instructions are for when English is selected for the GUI screen.

**1 Switch on the receiver and your TV.**
Make sure that the TV's video input is set to this receiver (for example, if you connected this receiver to the **VIDEO** jacks on your TV, make sure that the **VIDEO** input is now selected).

**2 Press RECEIVER on the remote control, then press HOME MENU.**
A Graphical User Interface (GUI) screen appears on your TV. Use ↑/↓/←/→ and **ENTER** to navigate through the screens and select menu items. Press **RETURN** to exit the current menu.

**3 Select 'System Setup' from the Home Menu.**

**4 Select 'OSD Language' from the System Setup menu.**

**5 Select the desired language.**

**6 Select 'OK' to change the language.**
The setting is completed and the **System Setup** menu reappears automatically.

## Automatically conducting optimum sound tuning (Auto MCACC)

The Auto MCACC Setup measures the acoustic characteristics of your listening area, taking into account ambient noise, speaker connection and speaker size, and tests for both channel delay and channel level. After you have set up the microphone provided with your system, the receiver uses the information from a series of test tones to optimize the speaker settings and equalization for your particular room.

**Important**

- Make sure the microphone and speakers are not moved during the Auto MCACC Setup.
- Using the Auto MCACC Setup will overwrite any existing settings for the MCACC preset you select.
- Before using the Auto MCACC Setup, the headphones should be disconnected.

**CAUTION**

- The test tones used in the Auto MCACC Setup are output at high volume.

**THX®**

- THX is a trademark of THX Ltd., which may be registered in some jurisdictions. All rights reserved.

**1 Switch on the receiver and your TV.**
Make sure that the TV's video input is set to this receiver.

**2 Connect the microphone to the MCACC SETUP MIC jack on the front panel.**
Make sure there are no obstacles between the speakers and the microphone.

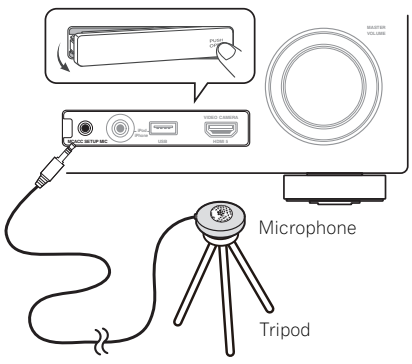

If you have a tripod, use it to place the microphone so that it's about ear level at your normal listening position. If you do not have a tripod, use some other object to install the microphone.[1]

The Full Auto MCACC display appears once the microphone is connected.[2]

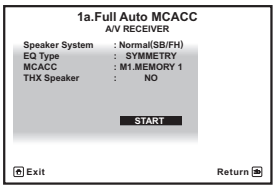


### 3 Select the parameters you want to set.[3]

If the speakers are connected using any setup other than **Normal(SB/FH)**, be sure to set **Speaker System** before the Auto MCACC Setup. See *Speaker system setting* on page 83.

- **Speaker System**[4] – Shows the current settings. When this is selected and **ENTER** is pressed, the speaker system selection screen appears. Select the proper speaker system, then press **RETURN** to return.
- **EQ Type** – This determines how the frequency balance is adjusted.
- **MCACC** – The six MCACC presets are used for storing surround sound settings for different listening positions. Simply choose an unused preset for now (you can rename it later in *Data Management* on page 80).
- **THX Speaker** – Select **YES** if you are using THX speakers (set all speakers to **SMALL**), otherwise leave it set to **NO**.

### 4 Press RECEIVER and then select START.

### 5 Follow the instructions on-screen.

Make sure the microphone is connected, and if you're using a subwoofer, make sure it is switched on and set to a comfortable volume level.

### 6 Wait for the test tones to finish, then confirm the speaker configuration in the GUI screen.

A progress report is displayed on-screen while the receiver outputs test tones to determine the speakers present in your setup. Try to be as quiet as possible while it's doing this.

If no operations are performed for 10 seconds while the speaker configuration check screen is being displayed, the Auto MCACC Setup will resume automatically. In this case, you don't need to select '**OK**' and press **ENTER** in step 7.

- With error messages (such as **Too much ambient noise!** or **Check microphone.**), select **RETRY** after checking for ambient noise (see *Problems when using the Auto MCACC Setup* on page 39) and verifying the mic connection. If there doesn't seem to be a problem, you can simply select **GO NEXT** and continue.

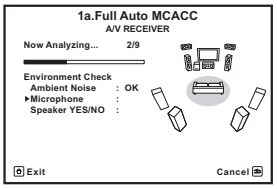


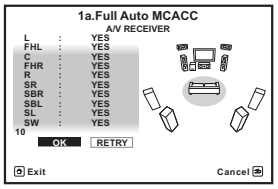


The configuration shown on-screen should reflect the actual speakers you have.

- If you see an **ERR** message (or the speaker configuration displayed isn't correct), there may be a problem with the speaker connection.
  If selecting **RETRY** doesn't work, turn off the power and check the speaker connections. If there doesn't seem to be a problem, you can simply use ↑/↓ to select the speaker and ←/→ to change the setting and continue.

**Note**

1 Install the microphone on a stable floor. Placing the microphone on any of the following surfaces may make accurate measurement impossible:
- Sofas or other soft surfaces.
- High places such as tabletops and sofa tops.

2 If you leave the GUI screen for over five minutes, the screen saver will appear.

3 • When data measurement is taken, the reverb characteristics data (both before- and after-calibration) that this receiver had been storing will be overwritten. If you want to save the reverb characteristics data before measuring, connect a USB memory device to this receiver and transfer the data.
• When measurement is taken of the reverb characteristics data other than **SYMMETRY**, the data are not measured after the correction. If you will need to measure after correcting data, take the measurement using the EQ Professional menu in the Manual MCACC setup (page 75).

4 If you are planning on bi-amping your front speakers, or setting up a separate speaker system in another room, read through *Speaker system setting* on page 83 and make sure to connect your speakers as necessary before continuing to step 4.

- If **Reverse Phase** is displayed, the speaker's wiring (+ and –) may be inverted. Check the speaker connections.[1]
  – If the connections were wrong, turn off the power, disconnect the power cord, then reconnect properly. After this, perform the Full Auto MCACC procedure again.
  – If the connections were right, select **GO NEXT** and continue.

**7 Make sure 'OK' is selected, then press ENTER.**
A progress report is displayed on-screen while the receiver outputs more test tones to determine the optimum receiver settings.

Again, try to be as quiet as possible while this is happening. It may take 3 to 10 minutes.

**8 The Auto MCACC Setup procedure is completed and the Home Menu menu reappears automatically.**
Be sure to disconnect the microphone from this receiver upon completion of the Auto MCACC Setup.

The settings made in the Auto MCACC Setup should give you excellent surround sound from your system, but it is also possible to adjust these settings manually using *The Advanced MCACC menu* on page 73 or *The System Setup and Other Setup menus* on page 82.[2]

## Problems when using the Auto MCACC Setup

If the room environment is not optimal for the Auto MCACC Setup (too much background noise, echo off the walls, obstacles blocking the speakers from the microphone) the final settings may be incorrect. Check for household appliances (air conditioner, fridge, fan, etc.), that may be affecting the environment and switch them off if necessary. If there are any instructions showing in the front panel display, please follow them.

- Some older TVs may interfere with the operation of the microphone. If this seems to be happening, switch off the TV when doing the Auto MCACC Setup.

## The Input Setup menu

You only need to make settings in the **Input Setup** menu if you didn't hook up your digital equipment according to the default settings (see *Input function default and possible settings* on page 40). In this case, you need to tell the receiver what equipment is hooked up to which terminal so the buttons on the remote control correspond to the components you've connected.

**1 Press RECEIVER on the remote control, then press HOME MENU.**
A Graphical User Interface (GUI) screen appears on your TV. Use ↑/↓/←/→ and **ENTER** to navigate through the screens and select menu items. Press **RETURN** to confirm and exit the current menu.

**2 Select 'System Setup' from the Home Menu.**

**3 Select 'Input Setup' from the System Setup menu.**

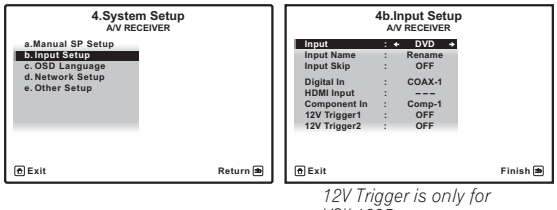


*12V Trigger is only for VSX-1325.*

**4 Select the input function that you want to set up.**
The default names correspond with the names next to the terminals on the rear panel (such as **DVD** or **VIDEO**) which, in turn, correspond with the names on the remote control.

**5 Select the input(s) to which you've connected your component.**
For example, if your DVD player only has an optical output, you will need to change the **DVD** input function's **Digital In** setting from **COAX-1** (default) to the optical input you've connected it to. The numbering (**OPT-1** to **3**) corresponds with the numbers beside the inputs on the back of the receiver.

**6 When you're finished, proceed to the settings for other inputs.**
There are optional settings in addition to the assignment of the input jacks:

**Note**

1 If the speaker is not pointed to the microphone (listening position) or when using speakers that affect the phase (dipole speakers, reflective speakers, etc.), **Reverse Phase** may be displayed even if the speakers are properly connected.

2 • Depending on the characteristics of your room, sometimes identical speakers with cone sizes of around 12 cm (5 inches) will end up with different size settings. You can correct the setting manually using the *Manual speaker setup* on page 82.
• The subwoofer distance setting may be farther than the actual distance from the listening position. This setting should be accurate (taking delay and room characteristics into account) and generally does not need to be changed.
• If Auto MCACC Setup measurement results are incorrect due to the interaction of the speakers and viewing environment, we recommend adjusting the settings manually.

- **Input Name** – You can choose to rename the input function for easier identification. Select **Rename** to do so, or **Default** to return to the system default.
- **Input Skip** – When set to **ON**, that input is skipped when selecting the input using **INPUT SELECT**. (**DVD** and other inputs can be still be selected directly with the input function buttons.)
- **12V Trigger1/2** (VSX-1325 only) – After connecting a component to one of the 12 volt triggers (see *Switching components on and off using the 12 volt trigger (VSX-1325 only)* on page 36), select **MAIN**, **ZONE 2**, **ZONE 3** or **OFF** for the corresponding trigger setting to switch it on automatically along with the (main or sub) zone specified.[1]

**7 When you're finished, press RETURN.**
You will return to the **System Setup** menu.

## Input function default and possible settings

The terminals on the receiver generally correspond to the name of one of the input functions. If you have connected components to this receiver differently from (or in addition to) the defaults below, see *The Input Setup menu* on page 39 to tell the receiver how you've connected up. The dots (●) indicate possible assignments.

| Input function | Input Terminals | | |
|---|---|---|---|
| | Digital | HDMI | Component |
| **DVD** | **COAX-1** | ●[a] | **IN 1** |
| **BD** | | (**BD**) | |
| **TV/SAT** | **OPT-1** | ●[a] | ● |
| **DVR/BDR** | **OPT-2** | ●[a] | **IN 2** |
| **VIDEO** | **OPT-3** | ●[a] | ● |
| **HDMI 1** | ● | (**HDMI-1**) | |
| **HDMI 2** | | (**HDMI-2**) | |
| **HDMI 3** | | (**HDMI-3**) | |
| **HDMI 4** | | (**HDMI-4**) | |
| **HDMI 5** (front panel) | | (**HDMI-5**) | |
| **INTERNET RADIO** | | | |
| **iPod/USB** | | | |
| **XM**[b] | | | |
| **CD** | **COAX-2** | | |
| **CD-R/TAPE** | ● | | |
| **TUNER** | | | |
| **ADAPTER PORT** | | | |
| **SIRIUS** | ● | | |

a.With **Control** with HDMI set to **ON**, assignments cannot be made (see *Control with HDMI function* on page 56).
b.XM Radio is only supported on the VSX-1325 only.

**Note**
1 *VSX-1325 only:* Devices connected to 12 volt triggers can be associated with **HDMI OUT** switching. For details, see *HDMI Setup* on page 56.

# Chapter 5: Basic playback

## Playing a source

Here are the basic instructions for playing a source (such as a DVD disc) with your home theater system.

**1 Switch on your system components and receiver.**
Make sure that the TV's video input is set to this receiver.

**2 Select the input function you want to play.**
You can use the input function buttons on the remote control, **INPUT SELECT**, or the front panel **INPUT SELECTOR** dial.[1]

**3 Press RECEIVER, then press AUTO/ALC/DIRECT (AUTO SURR/ALC/STREAM DIRECT) to select 'AUTO SURROUND' and start playback of the source.[2]**
If you're playing a Dolby Digital or DTS surround sound source, you should hear surround sound. If you are playing a stereo source, you will only hear sound from the front left/right speakers in the default listening mode.

- See also *Listening to your system* on page 52 for information on different ways of listening to sources.

It is possible to check on the front panel display whether or not multi-channel playback is being performed properly. For details, see *Auto Surround, ALC and Stream Direct with different input signal formats* on page 103.

When using a surround back speaker, **D D+PLIIx MOVIE** is displayed when playing Dolby Digital signals, and **DTS+Neo:6** is displayed when playing DTS 5.1-channel signals.

If the display does not correspond to the input signal and listening mode, check the connections and settings.

**4 Use the volume control to adjust the volume level.**
Turn down the volume of your TV so that all sound is coming from the speakers connected to this receiver.

### Playing a source with HDMI connection

- **Use INPUT SELECT to select the HDMI input you've connected to (for example, HDMI 1).**

You can also perform the same operation by using the **INPUT SELECTOR** dial on the front panel or by pressing **HDMI** on the remote control repeatedly.

- Set the HDMI parameter in *Setting the Audio options* on page 59 to **THROUGH** if you want to hear HDMI audio output from your TV (no sound will be heard from this receiver).
- If the video signal does not appear on your TV, try adjusting the resolution settings on your component or display. Note that some components (such as video game units) have resolutions that may not be converted. In this case, use an analog video connection.

## Playing an iPod

This receiver has the **iPod/iPhone/USB** terminal that will allow you to control playback of audio content from your iPod using the controls of this receiver.[3]

**1 Switch on the receiver and your TV.**
See *Connecting an iPod* on page 33.

- It is also possible to operate the iPod on the iPod itself, without using the TV screen. For details, see *Switching the iPod controls* on page 42.

**2 Press iPod USB on the remote control to switch the receiver to the iPod/USB.**
**Loading** appears in the GUI screen while the receiver verifies the connection and retrieves data from the iPod.

When the display shows the **iPod** top menu you're ready to play music from the iPod.[4]

**Note**

1 If you need to manually switch the input signal type press **SIGNAL SEL** (page 55).

2 You may need to check the digital audio output settings on your DVD player or digital satellite receiver. It should be set to output Dolby Digital, DTS and 88.2 kHz / 96 kHz PCM (2 channel) audio, and if there is an MPEG audio option, set this to convert the MPEG audio to PCM.

3 • This system is compatible with the audio and video of the iPod nano (audio only for the iPod nano 1G), iPod fifth generation (audio only), iPod classic, iPod touch and iPhone. However, some of the functions may be restricted for some models. The system is not compatible with the iPod shuffle.
• Compatibility may vary depending on the software version of your iPod and iPhone. Please be sure to use the latest available software version.
• iPod and iPhone are licensed for reproduction of non-copyrighted materials or materials the user is legally permitted to reproduce.
• Features such as the equalizer cannot be controlled using this receiver, and we recommend switching the equalizer off before connecting.
• Pioneer cannot under any circumstances accept responsibility for any direct or indirect loss arising from any inconvenience or loss of recorded material resulting from the iPod failure.
• When listening to a track on the iPod in the main zone, it is possible to control the sub zone, but not to listen to a different track in the sub zone from the one playing in the main zone.

4 The controls of your iPod will be inoperable when connected to this receiver.

## Playing back audio files stored on an iPod

To navigate songs on your iPod, you can take advantage of the GUI screen of your TV connected to this receiver.[1] You can also control all operations for music in the front panel display of this receiver.

### Finding what you want to play

When your iPod is connected to this receiver, you can browse songs stored on your iPod by playlist, artist name, album name, song name, genre or composer, similar to using your iPod directly.

**1 Use ↑/↓ to select 'Music' from the iPod top menu.**

**2 Use ↑/↓ to select a category, then press ENTER to browse that category.**

- To return to the previous level any time, press **RETURN**.

**3 Use ↑/↓ to browse the selected category (e.g., albums).**

- Use ←/→ to move to previous/next levels.

**4 Continue browsing until you arrive at what you want to play, then press ► to start playback.**

#### Tip

- You can play all of the songs in a particular category by selecting the **All** item at the top of each category list. For example, you can play all the songs by a particular artist.

### Basic playback controls

This receiver's remote control buttons can be used for basic playback of files stored on an iPod.[2]

- Press **iPod USB** to switch the remote control to the iPod/USB operation mode.

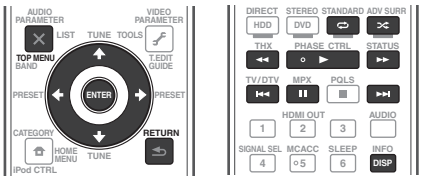


### Switching the iPod controls[3]

You can switch over the iPod controls between the iPod and the receiver.

**1 Press iPod CTRL to switch the iPod controls.**

This enables operation and display on your iPod, and this receiver's remote control and GUI screen become inactive.

**2 Press iPod CTRL again to switch back to the receiver controls.**

## Playing a USB device

It is possible to play files[4] using the USB interface on the front of this receiver.

**1 Switch on the receiver and your TV.**

See *Connecting a USB device* on page 34.[5]

**2 Press iPod USB on the remote control to switch the receiver to the iPod/USB.[6]**

**Loading** appears in the GUI screen as this receiver starts recognizing the USB device connected. When the display shows the **USB Top** menu you're ready to play from the USB device.

#### Important

If an **Over Current** message lights in the display, the power requirements of the USB device are too high for this receiver. Try following the points below:

- Switch the receiver off, then on again.
- Reconnect the USB device with the receiver switched off.
- Use a dedicated AC adapter (supplied with the device) for USB power.

If this doesn't remedy the problem, it is likely your USB device is incompatible.

**Note**

1 • Note that characters that cannot be displayed on this receiver are displayed as **#**.
• This feature is not available for photos on your iPod. To display photos, switch iPod operation to the iPod (see *Switching the iPod controls* below).

2 During Audiobook playback, press ↑/↓ to switch the playback speed: Faster ⟷ Normal ⟷ Slower

3 You cannot use this function, when an iPod of fifth generation or iPod nano of first generation is connected.

4 • Compatible USB devices include external magnetic hard drives, portable flash memory drives (particularly key drives) and digital audio players (MP3 players) of format FAT16/32.
• Pioneer cannot guarantee compatibility (operation and/or bus power) with all USB mass storage devices and assumes no responsibility for any loss of data that may occur when connected to this receiver.

5 Make sure the receiver is in standby when disconnecting the USB device.

6 The iPod/USB function cannot be selected in the main zone when the Internet radio function is selected in the sub zone. Also, the iPod/USB function cannot be selected in the sub zone when the Internet radio function is selected in the main zone.

## Playing back audio files stored on a USB memory device

The maximum number of levels that you can select in Step 2 (below) is 8. Also, you can display and play back up to 30 000 folders and files within a USB memory device.[1]

**1 Use ↑/↓ to select 'Music' from the USB Top menu.**

**2 Use ↑/↓ to select a folder, then press ENTER to browse that folder.**

- To return to the previous level any time, press **RETURN**.

**3 Continue browsing until you arrive at what you want to play, then press ► to start playback.[2]**

### Basic playback controls

This receiver's remote control buttons can be used for basic playback of files stored on USB memory devices.

- Press **iPod USB** to switch the remote control to the iPod/USB operation mode.

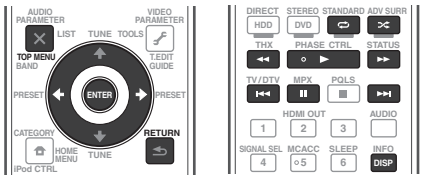


## Playing back photo files stored on a USB memory device[3]

**1 Use ↑/↓ to select 'Photos' from the USB Top menu.**

**2 Use ↑/↓ to select a folder, then press ENTER to browse that folder.**

- To return to the previous level any time, press **RETURN**.

**3 Continue browsing until you arrive at what you want to play, then press ► to start playback.[4]**

The selected content is displayed in full screen and a slideshow starts.

After a slideshow launches, pressing **ENTER** toggles between play and pause (only when **Theme** on the Slideshow Setup is set to **Normal (OFF)**).

### Basic playback controls

| Button(s) | What it does |
|---|---|
| **ENTER**, ► | Starts displaying a photo and playing a slideshow. |
| **RETURN**, ⬅ | Stops the player and returns to the previous menu. |
| ⏮[a] | Displays the previous photo content. |
| ⏭[a] | Displays the next photo content. |
| ⏸[a] | Pauses/unpauses the slideshow. |
| **DISP**[a] | Displays the photo information. |

a. You can only use this button when **Theme** on the Slideshow Setup is set to **Normal (OFF)**

### Slideshow Setup

Make the various settings for playing slideshows of photo files here.

**1 Use ↑/↓ to select 'Slideshow Setup' from the USB Top menu.**

**2 Select the setting you want.**

- **Theme** – Add various effects to the slideshow.
- **Interval** – Set the interval for switching the photos. This may not be available depending on the **Theme** setting.
- **BGM** – Play music files stored on the USB device while displaying photos.
- **Music Select** – Select the folder containing the music files to be played when **BGM** is set to **ON**.

**3 When you're finished, press RETURN.**

You will return to the **USB Top** menu.

**Note**

1 Note that non-Roman characters in the playlist are displayed as **#**.
2 • Copyrighted audio files cannot be played back on this receiver.
• DRM-protected audio files cannot be played back on this receiver.
3 Photo files cannot be played in the sub zone.
4 If the slideshow is left in the pause mode for five minutes, the list screen reappears.

## About playable file formats

The USB function of this receiver supports the following file formats. Note that some file formats are not available for playback although they are listed as playable file formats.

### Music files

| Category | Extension | Stream | | |
|---|---|---|---|---|
| **MP3**[a] | .mp3 | MPEG-1, 2, 2.5 Audio Layer-3 | Sampling frequency | 8 kHz to 48 kHz |
| | | | Quantization bitrate | 16 bit |
| | | | Channel | 2 ch |
| | | | Bitrate | 8 kbps to 320 kbps |
| | | | VBR/CBR | Supported/Supported |
| **WAV** | .wav | LPCM | Sampling frequency | 32 kHz, 44.1 kHz, 48 kHz |
| | | | Quantization bitrate | 8 bit, 16 bit |
| | | | Channel | 2 ch, Monaural |
| **WMA** | .wma | WMA8/9[b] | Sampling frequency | 8 kHz to 48 kHz |
| | | | Quantization bitrate | 16 bit |
| | | | Channel | 2 ch |
| | | | Bitrate | 8 kbps to 320 kbps |
| | | | VBR/CBR | Supported/Supported |

*a. "MPEG Layer-3 audio decoding technology licensed from Fraunhofer IIS and Thomson multimedia."*

b. Files encoded using Windows Media Codec 9 may be playable but some parts of the specification are not supported; specifically, Pro, Lossless, Voice.

### Photo files

| Category | Extension | | |
|---|---|---|---|
| **JPEG** | .jpg<br>.jpeg<br>.jpe<br>.jif<br>.jfif | Format | Meeting the following conditions:<br>• Baseline JPEG format (including files recorded in Exif/DCF format)<br>• Y:Cb:Cr - 4:4:4, 4:2:2 or 4:2:0 |
| | | Resolution | 30 to 8184 pixels vertical, 40 to 8184 pixels horizontal |

## Listening to the radio

The following steps show you how to tune in to FM and AM radio broadcasts using the automatic (search) and manual (step) tuning functions. If you already know the frequency of the station you want, see *Tuning directly to a station* below. Once you are tuned to a station you can memorize the frequency for recall later—see *Saving station presets* below for more on how to do this.

**1 Press TUNER to select the tuner.**

**2 Use BAND to change the band (FM or AM), if necessary.**

**3 Tune to a station.**

There are three ways to do this:

**Automatic tuning** – To search for stations in the currently selected band, press and hold **TUNE ⬆/⬇** for about a second. The receiver will start searching for the next station, stopping when it has found one. Repeat to search for other stations.

**Manual tuning** – To change the frequency one step at a time, press **TUNE ⬆/⬇**.

**High speed tuning** – Press and hold **TUNE ⬆/⬇** for high speed tuning. Release the button at the frequency you want.

### Improving FM sound

If the **TUNED** or **STEREO** indicator doesn't light when tuning to an FM station because the signal is weak, press **MPX** to switch the receiver into mono reception mode. This should improve the sound quality and allow you to enjoy the broadcast.

### Using Neural Surround

This feature uses Neural Surround™ technologies to achieve optimal surround sound from FM radio.

- While listening to FM radio, press **AUTO/ALC/DIRECT** for Neural Surround.

The **Neural Surround** mode can be selected also with **STANDARD**.

### Tuning directly to a station

**1 Press TUNER to select the tuner.**

**2 Use BAND to change the band (FM or AM), if necessary.**

**3 Press D.ACCESS (Direct Access).**

**4 Use the number buttons to enter the frequency of the radio station.**

For example, to tune to **106.00** (FM), press **1**, **0**, **6**, **0**, **0**.

If you make a mistake halfway through, press **D.ACCESS** twice to cancel the frequency and start over.

### Saving station presets

If you often listen to a particular radio station, it's convenient to have the receiver store the frequency for easy recall whenever you want to listen to that station. This saves the effort of manually tuning in each time. This receiver can memorize up to 63 stations, stored in seven banks, or classes (A to G) of 9 stations each.

**1 Tune to a station you want to memorize.**

**2 Press T.EDIT (TUNER EDIT).**

The display shows **PRESET MEMORY**, then a blinking memory class.

**3 Press CLASS to select one of the seven classes, then press PRESET ⬅/➡ to select the station preset you want.**

You can also use the number buttons to select a station preset.

**4 Press ENTER.**

After pressing **ENTER**, the preset class and number stop blinking and the receiver stores the station.

### Naming station presets

For easier identification, you can name your station presets.

**1 Choose the station preset you want to name.**

See *Listening to station presets* below for how to do this.

**2 Press T.EDIT (TUNER EDIT).**

The display shows **PRESET NAME**, then a blinking cursor at the first character position.

**3 Input the name you want.**

Use **⬆/⬇** to select a character, **⬅/➡** to set the position, and **ENTER** to confirm your selection.

**Tip**

- To erase a station name, simply repeat steps 1 to 3 and input eight spaces instead of a name.
- Once you have named a station preset, you can press **DISP** when listening to a station to switch the display between name and frequency.

### Listening to station presets

**1 Press TUNER to select the tuner.**

**2 Press CLASS to select the class in which the station is stored.**

Press repeatedly to cycle through classes A to G.

**3 Press PRESET ⬅/➡ to select the station preset you want.**

- You can also use the number buttons on the remote control to recall the station preset.

## Listening to Internet radio stations

Internet radio is an audio broadcasting service transmitted via the Internet.[1] There are a large number of Internet radio stations broadcasting a variety of services from every corner of the world. Some are hosted, managed, and broadcast by private individuals while others are by the corresponding traditional terrestrial radio stations or radio networks. Whereas terrestrial, or OTA (over-the-air), radio stations are geographically restricted on the range of radio waves broadcast from a transmitter through the air, Internet radio stations are accessible from anywhere in the world, as long as there is a connection to the Internet, as services are not transmitted through the air but are delivered over the World Wide Web. On this receiver you can select Internet radio stations by genre as well as by region.

**Important**

- Before listening to Internet radio, you need to program the Internet radio stations you wish to listen to onto this unit. See *Programming the Internet radio stations* below for how to program. Though the Internet radio stations are programmed in this receiver before it leaves the factory, the link may have expired. In that case, preset the stations again yourself.

**1 Press NET RADIO to switch to the Internet radio input.[2]**

The Internet Radio list screen is displayed.

**2 Use ↑/↓ to select the Internet radio station to play back, and then press ENTER.**

Press ↑/↓ to scroll up and down the list and select the desired item. When you press **ENTER**, playback starts with the playback screen being displayed for the selected item. Depending on the Internet line conditions, the sound may not be smooth when playing Internet radio.

To return to the list screen, press **RETURN**.[3]

### Programming the Internet radio stations

By programming the Internet radio stations you wish to listen to onto this receiver, you will be able to select those Internet radio stations. You can program up to 24 stations.

There are two methods of programming: one lets you use the GUI screen on this receiver; the other lets you connect your computer and use that screen.

#### Programming with the GUI screen

**1 Press TOP MENU when the Internet Radio station list is displayed.**

The Internet Radio Setup screen is displayed.

**2 Use ↑/↓ to select the Internet Radio station list screen you wish to edit, and then press ENTER.**

**3 Use ←/→ to select "Edit".**

- If you select **"Delete"**, information regarding the Internet radio stations programmed into the currently selected memory will be deleted.

**4 Enter the URL of the Internet radio station you wish to program.[4]**

Use ↑/↓ to select a letter and ←/→ to move the cursor.

- A URL containing up to 192 letters can be entered.

**5 Enter the title of the Internet radio station.**

Use ↑/↓ to select a letter and ←/→ to move the cursor.

- A title containing up to 22 letters can be entered.

#### Programming on the computer screen

You can enter the Internet radio list on the screen of a computer that is connected to the same LAN as this receiver, and send the list to this unit.

The computer needs to be connected in advance to the network of this receiver and set up.

**1 Turn on the computer and launch the Internet browser.**

**2 In the address bar on the browser, enter the IP address assigned to this receiver.**

For example, if the IP address of this receiver is "192.168.0.2", enter "http://192.168.0.2/".

When the connection is made with the receiver, a Top Menu will be displayed.

- This receiver's IP address can be found in the 'IP address, Proxy' menu (page 85).

**Note**

1 • To listen to Internet radio stations, you must have high-speed broadband Internet access. With a 56 K or ISDN modem, you may not enjoy the full benefits of Internet radio.
• The port number varies depending on the Internet radio station. Check the firewall settings.
• Broadcasts may be stopped or interrupted depending on the Internet radio station. In this case, you cannot listen to a radio station selected from the list of Internet radio stations.

2 The Internet radio function cannot be selected in the main zone when the iPod/USB function is selected in the sub zone. Also, the Internet radio function cannot be selected in the sub zone when the iPod/USB function is selected in the main zone.

3 When the list screen is displayed from the playback screen, the playback screen reappears automatically if no operation is performed for 10 seconds while the list screen is displayed.

4 The URL can also be entered by connecting a USB keyboard (see *Connecting a USB device* on page 34).

**3 Select 'Internet Radio Setting'.**
The following programming screen will be shown on the browser.

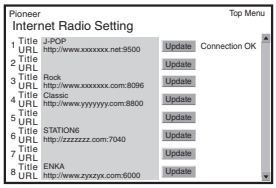


**4 Enter the title and URL of the Internet radio station you wish to program, then press 'Update'.**
The entered information will be transmitted to the receiver.

The connection to the URL designated from the computer will be confirmed:

If connection is successful, '**Connection OK**' will be displayed on screen, and the selected Internet radio station will begin playing via this receiver.

If the connection failed, '**Connection NG**' will be displayed. Check to see if the URL you entered is correct.

**Important**

- '**Connection OK**' and '**Connection NG**' are only displayed when this receiver is set to the Internet radio function.
- When entering the title and URL of Internet radio station, do not press '**Update**' while you are connected to other stations (i.e., labelled as "**Connecting...**").

## Listening to Satellite Radio

**Important**

- XM Radio is only supported on the VSX-1325. The VSX-1125 only supports SIRIUS Radio.

To listen to Satellite Radio, you'll need to connect either a SIRIUS or XM Satellite Radio tuner (sold separately) to your satellite-ready receiver. Satellite Radio is available to residents of the US (except Alaska and Hawaii) and Canada.

Satellite Radio delivers a variety of commercial-free music from categories ranging from Pop, Rock, Country, R&B, Dance, Jazz, Classical and many more plus coverage of all the top professional and college sports including play by play games from select leagues and teams. Additional programming includes expert sports talk, uncensored entertainment, comedy, family programming, local traffic and weather and news from your most trusted sources.

Whether you purchase a SIRIUS or XM tuner, you'll need to activate and subscribe to begin enjoying the service. Easy to follow installation and setup instructions are provided with the satellite tuners. Whichever service you choose, there are a variety of programming packages available, including the option of adding "The Best of SIRIUS" programming to your XM tuner or "The Best of XM" programming to your SIRIUS tuner, enabling you to enjoy the most popular programming among both services. The "Best of" packages are not available to SIRIUS or XM Canada subscribers at this time.

Family friendly packages are also available to restrict channels featuring content that may be inappropriate for children.

To subscribe to XM, U.S. customers should visit xmradio.com or call 1-800-XMRADIO (1-800-967-2346); Canadian customers should visit xmradio.ca or call XM Listener Care at 1-877-GETXMSR (1-877-438-9677).

To subscribe to SIRIUS, U.S. and Canadian customers can call 1-888-539-SIRI (1-888-539-7474) or visit sirius.com (US) or siriuscanada.ca (Canada).

## Listening to XM Radio

*(VSX-1325 only)*

For details on XM Radio, see *About SIRIUS and XM* on page 102.

- **Press XM to switch to the XM RADIO input.**

For best reception, you may need to move the XM Mini-Tuner antenna near a window (the southernmost window should produce the best results).

- If after pressing **XM** the display shows **Check XM Tuner** or **Check Antenna**, try disconnecting the receiver and tuner connections, and then plugging them back in.[1]

After connecting, you will be able to use this receiver to select channels and navigate categories using the GUI screen.[2]

### Selecting channels and browsing by genre

From the XM Channel Guide, you can browse XM Radio channels in the order that they appear, or you can narrow your channel search by genre.[3]

**Note**

1 You can check the strength of reception in *Using the XM Menu* on page 48.
2 It's easiest if you have your TV switched on to take advantage of the GUI screens. You can, however, use just the front panel display to do everything if you prefer.
3 Select **0** (**RADIO ID**) from the GUI to check the Radio ID of the XM Mini-Tuner.

**1 Press ↑/↓ to enter the XM Channel Guide, navigate through the channels one at time with ↑/↓, then press ENTER to listen to the XM radio broadcast.**

- To browse by genre, first press **CATEGORY**, use ↑/↓ to select a genre, then press **ENTER**.
- To cancel and exit any time, press **RETURN**.

**Tip**

- You can select channels directly by pressing **D.ACCESS**, then the three-digit channel number.
- You can press **DISP** to change XM Radio information in the front panel display.
- The currently selected channel is automatically chosen (without pressing **ENTER**) after five seconds.

### Using XM HD Surround

XM HD Surround uses Neural Surround™ technologies to achieve optimal surround sound from XM radio. XM HD Surround Sound is available on select XM channels only.

- **While listening to XM Radio, press AUTO/ALC/DIRECT for XM HD Surround listening.**

XM HD Surround can be selected also with **STANDARD**.

### Saving channel presets

This receiver can memorize up to 63 channels, stored in seven banks, or classes (A to G) of 9 channels each.[1]

**1 Select the channel you want to memorize.**
See *Selecting channels and browsing by genre* on page 47.

**2 Press T.EDIT.**
The display shows a blinking memory class.

**3 Press CLASS to select one of the seven classes, then press ←/→ to select the channel preset you want.**
You can also use the number buttons to select a preset.

- The default for all presets is **XM1**.

**4 Press ENTER.**
After pressing **ENTER**, the preset class and number stop blinking and the receiver stores the XM channel.

**Tip**

- You can also press **MEMORY** during reception display to save the information of up to five songs. See *Using the XM Menu* below to recall this information.

### Listening to channel presets

**1 Press CLASS to select the class in which the channel is stored.**
Press repeatedly to cycle through classes A to G.

**2 Press ←/→ to select the channel preset you want.**

- You can also use the number buttons on the remote control to recall the channel preset.

### Using the XM Menu

The XM Menu provides additional XM Radio features.[2]

**1 Press TOP MENU.**

**2 Use ↑/↓ to select a menu item, then press ENTER.**
Choose from the following menu items:

- **Channel Skip/Add** – Use ↑/↓ and **ENTER** to select channels you would like to remove/restore from/to the channel guide.
- **Antenna Aiming** – Check the strength of satellite and terrestrial reception.
- **Memory Recall** – Use ↑/↓ to browse your saved song information (see *Tip* above).

**3 When you're finished press TOP MENU to return to the reception display.**

## Listening to SIRIUS Radio

For details on SIRIUS Radio, see *About SIRIUS and XM* on page 102.

- **Press SIRIUS to switch to the SIRIUS input.**

For best reception, you may need to move the SiriusConnect™ tuner antenna near a window (refer to the manual for the SiriusConnect™ Home tuner for antenna placement recommendations).[3]

**Note**

1 You can reset the channel presets and memory in *Resetting the system* on page 64.
2 You can reset the Channel Skip/Add settings in *Resetting the system* on page 64.
3 • In order to activate your radio subscription, you will need the SIRIUS ID (SID) which uniquely identifies your tuner. The SID may be found on a sticker located on the packaging, or on the bottom of the tuner itself. The label will have a printed 12-digit SID number. When you have located the SID, write it down in the space provided near the end of this manual. Contact SIRIUS on the internet at: https://activate.siriusradio.com
Follow the prompts to activate your subscription, or you can also call SIRIUS toll-free at 1-888-539-SIRIUS (1-888-539-7474).
• Select **0** (**SIRIUS ID**) from the on-screen display to check the Radio ID of the SiriusConnect™ tuner (see *Selecting channels and browsing by genre* on page 49).

- If after pressing **SIRIUS** the display shows **Antenna Error**, try disconnecting the antenna and reconnecting.[1] If the display shows **Check Sirius Tuner**, check the connection of the AC adapter and this receiver to the SiriusConnect™ tuner.

After connecting, you will be able to use this receiver to select channels and navigate categories using the GUI screen display.[2]

### Selecting channels and browsing by genre

From the SIRIUS Channel Guide, you can browse SIRIUS Radio channels in the order that they appear, or you can narrow your channel search by genre.

**1 Press ↑/↓ to enter the SIRIUS Channel Guide, navigate through the channels one at time with ↑/↓, then press ENTER to listen to the SIRIUS radio broadcast.**

- To browse by genre, first press **CATEGORY**, use ↑/↓ to select a genre, then press **ENTER**.
- To cancel and exit any time, press **RETURN**.

**Tip**

- You can select channels directly by pressing **D.ACCESS**, then the three-digit channel number.
- You can press **DISP** to change SIRIUS Radio information in the front panel display.
- The currently selected channel is automatically chosen (without pressing **ENTER**) after five seconds.

## Saving channel presets

This receiver can memorize up to 63 channels, stored in seven banks, or classes (A to G) of nine channels each.[3]

**1 Select the channel you want to memorize.**
See *Selecting channels and browsing by genre* above.

**2 Press T.EDIT.**
The display shows a blinking memory class.

**3 Press CLASS to select one of the seven classes, then press ←/→ to select the channel preset you want.**
You can also use the number buttons to select a preset.

**4 Press ENTER.**
After pressing **ENTER**, the preset class and number stop blinking and the receiver stores the SIRIUS channel.

**Tip**

- You can also press **MEMORY** during reception display to save the information of up to five songs. See *Using the SIRIUS Menu* below to recall this information.

### Listening to channel presets

**1 Press CLASS to select the class in which the channel is stored.**
Press repeatedly to cycle through classes A to G.

**2 Press ←/→ to select the channel preset you want.**

- You can also use the number buttons on the remote control to recall the channel preset.

## Using the SIRIUS Menu

The SIRIUS Menu provides additional SIRIUS Radio features.[4]

**1 Press TOP MENU.**

**2 Use ↑/↓ to select a menu item, then press ENTER.**
Choose from the following menu items:

- **Channel Skip/Add** – Use ↑/↓ and **ENTER** to select channels you would like to remove/restore from/to the channel guide.
- **Parental Lock** – Use ↑/↓ and **ENTER** to select channels you would like to place under parental lock. Channels put under parental lock are not displayed in the Channel Guide, but may be accessed by directly inputting their channel number and providing the parental lock password.
- **Antenna Aiming** – Check the strength of satellite and terrestrial reception.
- **Memory Recall** – Use ↑/↓ to browse your saved song information (see *Tip* above).
- **Password Set** – Set the parental lock password.

**3 When you're finished press TOP MENU to return to the reception display.**

**Note**

1 You can check the strength of reception in *Using the SIRIUS Menu* below.
2 It's easiest if you have your TV switched on to take advantage of the GUI screens. You can, however, use just the front panel display to do everything if you prefer.
3 You can reset the Channel presets and memory in *Resetting the system* on page 64.
4 You can reset the Channel Skip/Add, Parental Lock and Password settings in *Resetting the system* on page 64.

## *Bluetooth* ADAPTER for Wireless Enjoyment of Music

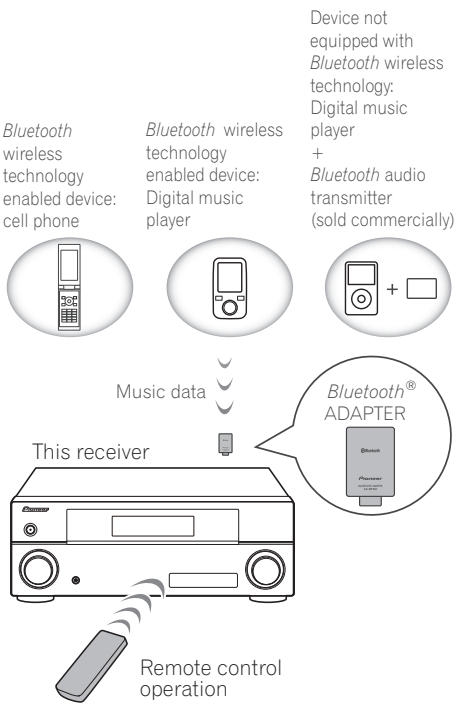


### Wireless music play

When the *Bluetooth* ADAPTER (Pioneer Model No. AS-BT100)[1] is connected to this unit, a product equipped with *Bluetooth* wireless technology (portable cell phone, digital music player, etc.) can be used to listen to music wirelessly. Also, by using a commercially available transmitter supporting *Bluetooth* wireless technology, you can listen to music on a device not equipped with *Bluetooth* wireless technology. The AS-BT100 model supports SCMS-T contents protection, so music can also be enjoyed on devices equipped with SCMS-T type *Bluetooth* wireless technology.

### Remote control operation

The remote control supplied with this unit allows you to play and stop media, and perform other operations.[2]

### Pairing the *Bluetooth* ADAPTER and *Bluetooth* wireless technology device

"Pairing" must be done before you start playback of *Bluetooth* wireless technology content using the *Bluetooth* ADAPTER. Make sure to perform pairing the first time you operate the system or any time pairing data is cleared. The pairing step is necessary to register the *Bluetooth* wireless technology device to enable *Bluetooth* communications.[3] For more details, see also the operating instructions of your *Bluetooth* wireless technology device.

**1 Press RECEIVER, then press Home Menu.**

**2 Select 'System Setup', then press ENTER.**

**3 Select 'Other Setup', then press ENTER.**

**4 Select 'Pairing Bluetooth Device', then press ENTER.**

**5 Select the 'Passcode' setting you want.**
Select the same passcode as the *Bluetooth* wireless technology device you wish to connect.

- **0000/1234/8888** – Select the passcode from these options. These are the passcodes that can be used in most cases.
- **Others** – Select to use a passcode other than those mentioned above.

**6 If you selected Others in step 5, enter the passcode.**
Use ↑/↓ to select a number and ←/→ to move the cursor.

**7 Follow the instructions displayed on the GUI screen to conduct pairing with the *Bluetooth* wireless technology device.**
Switch on the *Bluetooth* wireless technology device that you want to make pair, place it near the receiver and set it to the pairing mode.

**8 Check to see that the *Bluetooth* ADAPTER is detected by the *Bluetooth* wireless technology device.**
*When the Bluetooth wireless technology device is connected:*

**CONNECTED** appears in the receiver display.[4]

*When the Bluetooth wireless technology device is not connected:*

Go back to the passcode setting in step 5. In this case, perform the connection operation from the *Bluetooth* wireless technology device.

**Note**

1 The *Bluetooth* ADAPTER (AS-BT100) is sold separately.
2 • It must be necessary that the *Bluetooth* wireless technology enabled device supports AVRCP profiles.
• Remote control operations cannot be guaranteed for all *Bluetooth* wireless technology enabled devices.
3 • Pairing is required when you first use the *Bluetooth* wireless technology device and *Bluetooth* ADAPTER.
• To enable *Bluetooth* communication, pairing should be done with both your system and *Bluetooth* wireless technology device.
4 The system can display alphanumeric characters only. Other characters may not be displayed correctly.

**9 From the *Bluetooth* wireless technology device list, select *Bluetooth* ADAPTER and enter the Passcode selected in step 5.[1]**

## Listening to music contents of a *Bluetooth* wireless technology device with your system

**1 Press ADAPTER on the remote control to switch the receiver to ADAPTER PORT input.[2]**

**2 From the *Bluetooth* wireless technology device, perform the operation to connect to the *Bluetooth* ADAPTER.**

**3 Start playback of music contents stored on the *Bluetooth* wireless technology device.**

This receiver's remote control buttons can be used for basic playback of files stored on *Bluetooth* wireless technology devices.[3]

The *Bluetooth*® word mark and logos are registered trademarks owned by Bluetooth SIG, Inc. and any use of such marks by Pioneer Corporation is under license. Other trademarks and trade names are those of their respective owners.

**Note**

1 The passcode may in some cases be referred to as PASSKEY or PIN code.

2 When the *Bluetooth* ADAPTER is not plugged into the **ADAPTER PORT**, **NO ADAPTER** will be displayed if **ADAPTER PORT** input is selected.

3 • *Bluetooth* wireless technology device should be compatible with AVRCP profile.
• Depending on the *Bluetooth* wireless technology device you use, operation may differ from what is shown in the remote control buttons.

# Chapter 6:
# Listening to your system

**Important**

- The listening modes and many features described in this section may not be available depending on the current source, settings and status of the receiver.

## Auto playback

There are many ways to listen back to sources using this receiver, but the simplest, most direct listening option is the Auto Surround feature. The receiver automatically detects what kind of source you're playing and selects multichannel or stereo playback as necessary.

- **While listening to a source, press RECEIVER, then press AUTO/ALC/DIRECT (AUTO SURR/ALC/STREAM DIRECT) for auto playback of a source.**

**AUTO SURROUND** shows briefly in the display before showing the decoding or playback format. Check the digital format indicators in the front panel display to see how the source is being processed.

- If the source is Dolby Digital, DTS, or Dolby Surround encoded, the proper decoding format will automatically be selected and shows in the display.
- When listening to the FM radio, the Neural Surround feature is selected automatically (see *Using Neural Surround* on page 45 for more on this).
- When listening to the **ADAPTER PORT** input, the **SOUND RETRIEVER AIR** feature is selected automatically (see *Listening in stereo* on page 54 for more on this).
- *VSX-1325 only:* When listening to XM Radio, the XM HD Surround feature is selected automatically (see *Using XM HD Surround* on page 48 for more on this).

In the Auto level control (**ALC**) mode, this receiver equalizes playback sound levels.

**Tip**

- When **ALC** is selected, the effect level can be adjusted using the **EFFECT** parameter in *Setting the Audio options* on page 59.

## Listening in surround sound

Using this receiver, you can listen to any source in surround sound. However, the options available will depend on your speaker setup and the type of source you're listening to.

### Standard surround sound

The following modes provide basic surround sound for stereo and multichannel sources.

- **While listening to a source, press RECEIVER, then press STANDARD (STANDARD SURROUND).**

If necessary, press repeatedly to select a listening mode.

- If the source is Dolby Digital, DTS, or Dolby Surround encoded, the proper decoding format will automatically be selected and shows in the display.[1]

*With two channel sources*, you can select from:

- **DD Pro Logic IIx MOVIE** – Up to 7.1 channel sound (surround back), especially suited to movie sources
- **DD Pro Logic IIx MUSIC** – Up to 7.1 channel sound (surround back), especially suited to music sources[2]
- **DD Pro Logic IIx GAME** – Up to 7.1 channel sound (surround back), especially suited to video games
- **DD PRO LOGIC** – 4.1 channel surround sound (sound from the surround speakers is mono)
- **DD Pro Logic IIz HEIGHT** – Up to 7.1 channel sound (front height)[3]
- **WIDE SURROUND MOVIE** – Up to 7.1 channel sound (front wide), especially suited to movie sources[4]
- **WIDE SURROUND MUSIC** – Up to 7.1 channel sound (front wide), especially suited to music sources[4]
- **Neo:6 CINEMA** – 7.1 channel sound (surround back), especially suited to movie sources[5]
- **Neo:6 MUSIC** – 7.1 channel sound (surround back), especially suited to music sources[5]
- **Neural Surround** – Up to 7.1 channel sound (surround back), especially suited to music sources[6]

**Note**

1 If the surround back speakers are not connected or **V.SB** is switched **OFF** (page 59), **DD Pro Logic IIx** becomes **DD Pro Logic II** (5.1 channel sound).

2 When listening to 2-channel sources in Dolby Pro Logic IIx Music mode, there are three further parameters you can adjust: **C.WIDTH**, **DIMENSION** and **PANORAMA**. See *Setting the Audio options* on page 59 to adjust them.

3 • This mode can only be selected when **Speaker System** is set to **Normal(SB/FH)**.
• When listening sources in **DD Pro Logic IIz HEIGHT** mode, you can also adjust the **H.GAIN** effect (see *Setting the Audio options* on page 59).

4 This mode can only be selected when **Speaker System** is set to **Normal(SB/FW)**.

5 When listening to 2-channel sources in Neo:6 Cinema or Neo:6 Music mode, you can also adjust the center image effect (see *Setting the Audio options* on page 59).

6 **Neural Surround** can be selected for 2-channel signals for which the input signal is PCM (48 kHz or less), Dolby Digital, DTS or analog 2-channel sources.

- **XM HD Surround** (VSX-1325 only) – Up to 7.1 channel sound, especially suited to music sources[1]

*With multichannel sources, if you have connected surround back, front height or front wide speakers*, you can select (according to format):

- **Pro Logic IIx MOVIE** – See above
- **Pro Logic IIx MUSIC** – See above
- **Dolby Digital EX** – Creates surround back channel sound for 5.1 channel sources and provides pure decoding for 6.1 channel sources (like Dolby Digital Surround EX)
- **DTS-ES** – Allows you to hear 6.1 channel playback with DTS-ES encoded sources
- **DTS Neo:6** – Allows you to hear 6.1 channel playback with DTS encoded sources
- **Pro Logic IIz HEIGHT** – See above[2]
- **WIDE SURROUND MOVIE** – See above[3]
- **WIDE SURROUND MUSIC** – See above[3]
- Straight Decode – Plays back without the effects above.

## Using the Home THX modes

THX and Home THX are technical standards created by THX Ltd. for cinema and home theater sound. Home THX is designed to make home theater audio sound more like what you hear in a cinema.

Different THX options will be available depending on the source and the setting for surround back channel processing (see *THX Audio Setting* on page 85 for more on this).

- **Press RECEIVER, then press THX (HOME THX) to select a listening mode.**

*With two channel sources*, press **THX** repeatedly to select a matrix-decoding process for the **THX CINEMA** mode (see *THX Audio Setting* on page 85 for an explanation of each process):

- **THX CINEMA**
- **THX MUSIC**
- **THX GAMES**
- **Pro Logic IIx MOVIE+THX CINEMA**
- **PRO LOGIC+THX CINEMA**
- **Neo:6 CINEMA+THX CINEMA**
- **Pro Logic IIx MUSIC+THX MUSIC**
- **Neo:6 MUSIC+THX MUSIC**
- **Pro Logic IIx GAME+THX GAMES**
- **Pro Logic IIz HEIGHT+THX CINEMA**[2]
- **Pro Logic IIz HEIGHT+THX MUSIC**[2]
- **Pro Logic IIz HEIGHT+THX GAMES**[2]
- **THX SELECT2 GAMES**[4]

*With multichannel sources*, press **THX (HOME THX)** repeatedly to select from:

- **THX CINEMA**
- **THX MUSIC**
- **THX GAMES**
- **THX Surround EX** – Allows you to hear 6.1 or 7.1 channel playback with 5.1 channel sources
- **Neo:6 CINEMA+THX CINEMA**
- **Pro Logic IIx MOVIE+THX CINEMA**
- **THX SELECT2 CINEMA**[4] – Allows you to hear 7.1 channel playback with 5.1 channel sources
- **Pro Logic IIx MUSIC+THX MUSIC**
- **Pro Logic IIz HEIGHT+THX CINEMA**[2]
- **Pro Logic IIz HEIGHT+THX MUSIC**[2]
- **Pro Logic IIz HEIGHT+THX GAMES**[2]
- **THX SELECT2 MUSIC**[4]– This mode is suited not only for sources recorded in Dolby Digital and DTS, but also to all multi-channel music sources (DVD-Audio, etc.).
- **THX SELECT2 GAMES**[4] – This mode is suited to playing the sound of games.

## Using the Advanced surround effects

The Advanced surround effects can be used for a variety of additional surround sound effects. Most Advanced Surround modes are designed to be used with film soundtracks, but some modes are also suited for music sources. Try different settings with various soundtracks to see which you like.

- **Press RECEIVER, then press ADV SURR (ADVANCED SURROUND) repeatedly to select a listening mode.**
  - **ACTION** – Designed for action movies with dynamic soundtracks
  - **DRAMA** – Designed for movies with lots of dialog
  - **SCI-FI** – Designed for science fiction with lots of special effects
  - **MONO FILM** – Creates surround sound from mono soundtracks
  - **ENT.SHOW** – Suitable for musical sources
  - **EXPANDED** – Creates an extra wide stereo field

**Note**

1 **XM HD Surround** can be selected only with the XM input.
2 • This mode can only be selected when **Speaker System** is set to **Normal(SB/FH)**.
• When listening sources in **Pro Logic IIz HEIGHT** mode, you can also adjust the **H.GAIN** effect (see *Setting the Audio options* on page 59).
3 This mode can only be selected when **Speaker System** is set to **Normal(SB/FW)**.
4 Unavailable with only one surround back speaker connected or not connected.

- **TV SURROUND** – Provides surround sound for both mono and stereo TV sources
- **ADVANCED GAME** – Suitable for video games
- **SPORTS** – Suitable for sports programs
- **CLASSICAL** – Gives a large concert hall-type sound
- **ROCK/POP** – Creates a live concert sound for rock and/or pop music
- **UNPLUGGED** – Suitable for acoustic music sources
- **EXT.STEREO** – Gives multichannel sound to a stereo source, using all of your speakers
- **PHONES SURR** – When listening through headphones, you can still get the effect of overall surround.

**Tip**

- When an Advanced Surround listening mode is selected, the effect level can be adjusted using the **EFFECT** parameter in *Setting the Audio options* on page 59.

## Listening in stereo

When you select **STEREO**, you will hear the source through just the front left and right speakers (and possibly your subwoofer depending on your speaker settings). Multichannel sources are downmixed to stereo.

- **While listening to a source, press RECEIVER, then press STEREO for stereo playback.**

Press repeatedly to switch between:

- **STEREO** – The audio is heard with your sound settings and you can still use the audio options.
- **F.S.SURR FOCUS** – See *Using Front Stage Surround Advance* below for more on this.
- **F.S.SURR WIDE** – See *Using Front Stage Surround Advance* below for more on this.
- **SOUND RETRIEVER AIR**[1] – Suitable for listening to the sound from a *Bluetooth* wireless technology device.

## Using Front Stage Surround Advance

The Front Stage Surround Advance function allows you to create natural surround sound effects using just the front speakers and the subwoofer.

- **While listening to a source, press RECEIVER, then press STEREO to select Front Stage Surround Advance modes.**
  - **STEREO** – See *Listening in stereo* above for more on this.
  - **F.S.SURR FOCUS** – Use to provide a rich surround sound effect directed to the center of where the front left and right speakers sound projection area converges.
  - **F.S.SURR WIDE** – Use to provide a surround sound effect to a wider area than **FOCUS** mode.

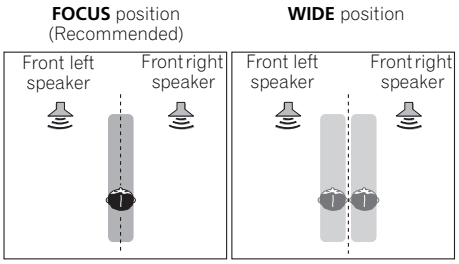


## Using Stream Direct

Use the Stream Direct modes when you want to hear the truest possible reproduction of a source. All unnecessary signal processing is bypassed, and you're left with the pure analog or digital sound source. Processing differs depending on the input signal and whether or not surround back speakers are connected. For details, see *Auto Surround, ALC and Stream Direct with different input signal formats* on page 103.

- **While listening to a source, press RECEIVER, then press AUTO/ALC/DIRECT (AUTO SURR/ALC/STREAM DIRECT) to select the mode you want.**

Check the digital format indicators in the front panel display to see how the source is being processed.

- **AUTO SURROUND** – See *Auto playback* on page 52.
- **ALC** – Listening in Auto level control mode (page 52).
- **DIRECT** – Plays back sound from the source with the least modification next to **PURE DIRECT**. With **DIRECT**, the only modifications added to **PURE DIRECT** playback are calibration of the sound field by the MCACC system and the Phase Control effect.
- **PURE DIRECT** – Plays back unmodified sound from source with only minimal digital treatment. No sound is output from the Speaker B in this mode.

**Note**

1 The **SOUND RETRIEVER AIR** listening mode can only selected when the **ADAPTER PORT** input.

## Selecting MCACC presets

- Default setting: **MEMORY 1**

If you have calibrated your system for different listening positions, you can switch between settings to suit the kind of source you're listening to and where you're sitting (for example, watching movies from a sofa, or playing a video game close to the TV).

- **While listening to a source, press RECEIVER, then press MCACC.**

Press repeatedly to select one of the six MCACC presets[1]. See *Data Management* on page 80 to check and manage your current settings.

## Choosing the input signal

On this receiver, it is possible to switch the input signals for the different inputs as described below.[2]

- **Press RECEIVER, then press SIGNAL SEL to select the input signal corresponding to the source component.**

Each press cycles through the options as follows:

- **AUTO** – The receiver selects the first available signal in the following order: **HDMI**; **DIGITAL**; **ANALOG**.
- **ANALOG** – Selects an analog signal.
- **DIGITAL** – Selects an optical or coaxial digital signal.
- **HDMI** – Selects an HDMI signal.[3]
- **PCM** – For PCM input signals.[4] The receiver selects the first available signal in the following order: **HDMI**; **DIGITAL**.

When set to **DIGITAL**, **HDMI** or **AUTO** (only selected **DIGITAL** or **HDMI**), the indicators light according to the signal being decoded (see *Display* on page 13).

## Better sound using Phase Control

This receiver's Phase Control feature uses phase correction measures to make sure your sound source arrives at the listening position in phase, preventing unwanted distortion and/or coloring of the sound.

Phase Control technology provides coherent sound reproduction through the use of phase matching[5] for an optimal sound image. The default setting is on and we recommend leaving Phase Control switched on for all sound sources.

- **Press RECEIVER, then press PHASE CTRL (PHASE CONTROL) to switch on phase correction.**

The **PHASE CONTROL** indicator on the front panel lights.

**Note**

1 • These settings have no effect when headphones are connected.
• You can also press ←/→ to select the MCACC preset.

2 • This receiver can only play back Dolby Digital, PCM (32 kHz to 192 kHz), DTS (including DTS 96/24) and WMA9 Pro digital signal formats. The compatible signals via the HDMI terminals are: Dolby Digital, DTS, WMA9 Pro, PCM (32 kHz to 192 kHz), Dolby TrueHD, Dolby Digital Plus, DTS-EXPRESS, DTS-HD Master Audio and SACD.
• You may get digital noise when an LD, CD, DVD or BD player compatible with DTS is playing an analog signal. To prevent noise, make the proper digital connections (page 28) and set the signal input to **DIGITAL**.
• Some DVD players don't output DTS signals. For more details, refer to the instruction manual supplied with your DVD player.

3 When the **HDMI** audio output parameter is set to **THROUGH**, the sound will be heard through your TV, not from this receiver.

4 • This is useful if you find there is a slight delay before **AUTO** recognizes the PCM signal on a CD, for instance.
• When **PCM** is selected, noise may be output during playback of non-PCM sources. Please select another input signal if this is a problem.

5 • Phase matching is a very important factor in achieving proper sound reproduction. If two waveforms are 'in phase', they crest and trough together, resulting in increased amplitude, clarity and presence of the sound signal. If a crest of a wave meets a trough, then the sound will be 'out of phase' and an unreliable sound image will be produced.
• The **PHASE CONTROL** feature is available even when the headphones are plugged in.
• If your subwoofer has a phase control switch, set it to the plus (+) sign (or 0°). However, the effect you can actually feel when **PHASE CONTROL** is set to **ON** on this receiver depends on the type of your subwoofer. Set your subwoofer to maximize the effect. It is also recommended you try changing the orientation or the place of your subwoofer.
• Set the built-in lowpass filter switch of your subwoofer to off. If this cannot be done on your subwoofer, set the cutoff frequency to a higher value.
• If the speaker distance is not properly set, you may not have a maximized **PHASE CONTROL** effect.
• The **PHASE CONTROL** mode cannot be set to **ON** in the following cases:
– When the **PURE DIRECT** mode is switched on.
– When the **HDMI** audio output parameter is set to **THROUGH** in *Setting the Audio options* on page 59.

# Chapter 7:
# Control with HDMI function

Synchronized operations below with a **Control** with HDMI-compatible Pioneer TV or Blu-ray disc player or with a component of another make that supports the **Control** with HDMI functions are possible when the component is connected to the receiver using an HDMI cable.

- The receiver's volume can be set and the sound can be muted using the TV's remote control.
- The receiver's input switches over automatically when the TV's channel is changed or a **Control** with HDMI-compatible component is played.
- The receiver's power is also set to standby, when the TV's power is set to standby.

**Important**

- With Pioneer devices, the **Control** with HDMI functions are referred to as "KURO LINK".
- You cannot use this function with components that do not support **Control** with HDMI.
- We do not guarantee this receiver will work with Pioneer **Control** with HDMI-compatible components or components of other makes that support the **Control** with HDMI function. We do not guarantee that all synchronized operations will work with components of other makes that support the **Control** with HDMI function.
- Use a High Speed HDMI® cable when you want to use the **Control** with HDMI function. The **Control** with HDMI function may not work properly if a different type of HDMI cable is used.
- For details about concrete operations, settings, etc., refer to also the operating instructions for each component.

## Making Control with HDMI connections

You can use synchronized operation for a connected TV and up to five other components.

- Be sure to connect the TV's audio cable to the audio input of this unit. When the TV and receiver are connected by HDMI connections, if the TV supports the HDMI Audio Return Channel function, the sound of the TV is input to the receiver via the HDMI terminal, so there is no need to connect an audio cable. In this case, set **TV Audio** at **HDMI Setup** to **via HDMI** (see *HDMI Setup* below).

For details, see *Connecting your TV and playback components* on page 24.

**Important**

- When connecting this system or changing connections, be sure to switch the power off and disconnect the power cord from the wall socket. After completing all connections, connect the power cords to the wall socket.
- After this receiver is connected to an AC outlet, a 2 second to 10 second HDMI initialization process begins. You cannot carry out any operations during initialization. The HDMI indicator on the display unit blinks during initialization, and you can turn this receiver on once it has stopped blinking.
- To get the most out of this function, we recommend that you connect your HDMI component not to a TV but rather directly to the HDMI terminal on this receiver.
- While the receiver is equipped with six HDMI inputs (BD, HDMI 1 to 5), the **Control** with HDMI function can only be used with up to three DVD or Blu-ray disc players or up to three DVD or Blu-ray disc recorders.
- *VSX-1325 only:* The **Control** with HDMI function can be used with a TV connected to the **HDMI OUT 1** terminal, but not with a TV connected to the **HDMI OUT 2** terminal.

## HDMI Setup

You must adjust the settings of this receiver as well as the connected **Control** with HDMI-compatible components in order to make use of the **Control** with HDMI function. For more information see the operating instructions for each component.

**1 Press RECEIVER, then press HOME MENU.**

**2 Select 'System Setup', then press ENTER.**

**3 Select 'Other Setup', then press ENTER.**

**4 Select 'HDMI Setup', then press ENTER.**

**5 Select the 'Control' setting you want.**

Choose whether to set this unit's **Control** with HDMI function **ON** or **OFF**. You will need to set it to **ON** to use the **Control** with HDMI function.

When using a component that does not support the **Control** with HDMI function, set this to **OFF**.

- **ON** – Enables the **Control** with HDMI function. When this unit's power is turned off and you have a supported source begin playback while using the **Control** with HDMI function, the audio and video outputs from the HDMI connection are output from the TV.

- **OFF** – The **Control** with HDMI is disabled. Synchronized operations cannot be used. When this unit's power is turned off, audio and video of sources connected via HDMI are not output.

**6 Select the 'Control Mode' setting you want.**
Choose whether you want to enable HDMI for all linked functions or the PQLS function only. However, Display Power Off will activate the settings set forth in step 7 below.

- **ALL** – Enabled for all linked functions.
- **PQLS** – Enabled only for the PQLS function. When **PQLS** is selected, link functions other than the PQLS function may not work properly. If you wish to use all link functions, select **ALL**.

**7 Select the 'Display Power Off' setting you want.**
If the TV's power is turned off while using the **Control** with HDMI function, the receiver's power is also turned off (all power off function). This function can be disabled.

- **YES** – The all power off function is enabled. The receiver's power turns off together with the TV's power.
  This function only works when the input for a component connected to the receiver by HDMI connection is selected or when watching the TV.
- **NO** – The all power off function is disabled. The receiver's power is not affected when the TV's power is turned off.

**8 Select the 'Standby Through' setting you want.**
It is possible to transfer signals from an HDMI-connected player to the TV when this receiver's power is on standby as long as **Control** is **ON**, but the amount of energy consumed rises. It is, however, possible to minimize energy consumption when power is set to standby.

- **Normal** – Regular setting. Power-up time from standby is short.
- **Eco** – Conserves energy while standby. Power-up time is longer than when set to **Normal**.

**9 Select the 'TV Audio' setting you want.**
When a TV supporting the HDMI Audio Return Channel function is connected to the receiver, the sound of the TV can be input via the HDMI terminal.

- **Normal** – The TV's sound is input from the Audio input terminals other than HDMI inputs.
- **via HDMI** – The TV's sound is input via the HDMI terminal. This can only be selected when **Control** is set to **ON**.

**10** *VSX-1325 only:* **Select the '12V Trigger' setting you want.**
The component connected to the **12V TRIGGER** jack can be turned on and off when **HDMI OUT** is switched. **HDMI OUT 1**, **HDMI OUT 2** or **OFF** can be selected. Select **OFF** when you want the component to switch when the input function is switched.

**11 When you're finished, press HOME MENU.**

## Before using synchronization

Once you have finished all connections and settings, you must:

**1 Put all components into standby mode.**

**2 Turn the power on for all components, with the power for the TV being turned on last.**

**3 Choose the HDMI input to which the TV is connected to this receiver, and see if video output from connected components displays properly on the screen or not.**

**4 Check whether the components connected to all HDMI inputs are properly displayed.**

## About synchronized operations

The **Control** with HDMI-compatible component connected to the receiver operates in sync as described below.

- From the menu screen of the **Control** with HDMI-compatible TV, set audio to be played through this receiver, and the receiver will switch to the synchronized amp mode.
- When in the synchronized amp mode, you can adjust the receiver's volume or mute the sound using the TV's remote control.
- When in the synchronized amp mode, the synchronized amp mode is canceled when the receiver's power is turned off. To turn the synchronized amp mode back on, set audio to be played through the receiver from the TV's menu screen, etc. This receiver will power up and switch to the synchronized amp mode.
- When the synchronized amp mode is canceled, the receiver's power turns off if you were viewing an HDMI input or a TV program on the TV.
- When in the synchronized amp mode, the synchronized amp mode is canceled if an operation that produces sound from the TV is performed from the TV's menu screen, etc.
- When the TV's power is set to standby, the receiver's power is also set to standby. (Only when the input for a component connected to the receiver by HDMI connection is selected or when watching the TV.)
- The receiver's input switches automatically when the **Control** with HDMI-compatible component is played.
- The receiver's input switches automatically when the TV's channel is switched.
- The synchronized amp mode remains in effect even if the receiver's input is switched to a component other than one connected by HDMI.

The operations below can also be used on Pioneer **Control** with HDMI-compatible TVs.

- When the receiver's volume is adjusted or the sound is muted, the volume status is displayed on the TV's screen.
- When the OSD language is switched on the TV, the receiver's language setting also switches accordingly.

### About connections with a product of a different brand that supports the Control with HDMI function

The synchronized operations below can be used when the receiver's **Control** with HDMI function is connected to a TV of a brand other than Pioneer that supports the **Control** with HDMI function. (Depending on the TV, however, some of the **Control** with HDMI functions may not work.)

- When the TV's power is set to standby, the receiver's power is also set to standby. (Only when the input for a component connected to the receiver by HDMI connection is selected or when watching the TV)
- The sound of TV programs or an external input connected to the TV can also be output from the speakers connected to the receiver. (If the TV does not support the HDMI Audio Return Channel function, this requires connection of an optical digital cable, etc., in addition to the HDMI cable.)

The synchronized operations below can be used when the receiver's **Control** with HDMI function is connected to a player or recorder of a brand other than Pioneer that supports the **Control** with HDMI function.

- When playback starts on the player or recorder, the receiver's input switches to the HDMI input to which that component is connected.

See the Pioneer website for the latest information on the models of non-Pioneer brands and products that support the **Control** with HDMI function.

## Setting the PQLS function

PQLS (Precision Quartz Lock System) is a digital audio signal transfer control technology using the **Control** with HDMI function. It offers higher-quality audio playback by controlling audio signals from the receiver to a PQLS compatible player, etc. This enables removing jitter that has a negative effect on the quality of the sound and is generated upon transmission.

- On players compatible with PQLS Multi Surround, PQLS works for all sources. Set the player's audio output to Linear PCM.
- On players compatible with PQLS 2 ch Audio, PQLS only works when playing CDs.

Please refer to the operating instructions supplied with your player for more information.

This function is activated when **Control** is set to **ON**.[1]

- **Press RECEIVER, then press PQLS to select the PQLS setting.**

The setting is displayed on the front panel display.

- **PQLS AUTO** – PQLS is enabled. A precision quartz controller in this receiver eliminates distortion caused by timing errors (jitter), giving you the best possible digital-to-analog conversion when you use the HDMI interface. This is valid as an HDMI function for PQLS-compatible players.
- **PQLS OFF** – PQLS is disabled.

## Cautions on the Control with HDMI function

- Connect the TV directly to this receiver. Interrupting a direct connection with other amps or an AV converter (such as an HDMI switch) can cause operational errors.
- Only connect components (Blu-ray disc player, etc.) you intend to use as a source to the HDMI input of this receiver. Interrupting a direct connection with other amps or an AV converter (such as an HDMI switch) can cause operational errors.
- When **Control** is set to **ON**, HDMI Input in *The Input Setup menu* on page 39 is automatically set to **OFF**.
- When the receiver's **Control** is turned **ON**, even if the receiver's power is in the standby mode, it is possible to output the audio and video signals from a player via HDMI to the TV without producing sound from the receiver, but only when a **Control** with HDMI-compatible component (Blu-ray disc player, etc.) and compatible TV are connected. In this case, the receiver's power turns on and the power and **HDMI** indicators light.

**Note**

1 • If a listening mode other than **AUTO SURROUND**, **ALC**, **DIRECT**, **PURE DIRECT** or **STEREO** is selected while the PQLS effect is enabled, the PQLS effect is disabled.
• When this receiver is connected by HDMI cable to a Pioneer player that is compatible with the PQLS function via HDMI connection and HDMI reauthentication is performed (the **HDMI** indicator blinks), the PQLS effect is enabled and the listening mode is set to **AUTO SURROUND** if a listening mode other than **AUTO SURROUND**, **ALC**, **DIRECT**, **PURE DIRECT** or **STEREO** is selected.

# Chapter 8:
# Using other functions

## Setting the Audio options

There are a number of additional sound settings you can make using the **AUDIO PARAMETER** menu. The defaults, if not stated, are listed in bold.

**Important**

- Note that if a setting doesn't appear in the **AUDIO PARAMETER** menu, it is unavailable due to the current source, settings and status of the receiver.

**1 Press RECEIVER, then press AUDIO PARAMETER.**

**2 Use ⬆/⬇ to select the setting you want to adjust.**
Depending on the current status/mode of the receiver, certain options may not be able to be selected. Check the table below for notes on this.

**3 Use ⬅/➡ to set as necessary.**
See the table below for the options available for each setting.

**4 Press RETURN to confirm and exit the menu.**

| Setting | What it does | Option(s) |
|---|---|---|
| **MCACC** (MCACC preset) | Selects your favorite MCACC preset memory when multiple preset memories are saved. When an MCACC preset memory has been renamed, the given name is displayed. | *M1. MEMORY 1* to *M6. MEMORY 6* Default: **M1. MEMORY 1** |
| **EQ** (Acoustic Calibration EQ) | Switches on/off the effects of EQ Pro. | **ON** / *OFF* |
| **S-WAVE** (Standing Wave) | Switches on/off the effects of Standing Wave Control. | **ON** / *OFF* |
| **DELAY** (Sound Delay) | Some monitors have a slight delay when showing video, so the soundtrack will be slightly out of sync with the picture. By adding a bit of delay, you can adjust the sound to match the presentation of the video. | 0.0 to 10.0 (frames) *1 second = 30 frames (NTSC)* Default: **0.0** |
| **MIDNIGHT** | Allows you to hear effective surround sound of movies at low volumes. | **MIDNIGHT/ LOUDNESS OFF** / *MIDNIGHT ON* |
| **LOUDNESS** | Used to get good bass and treble from music sources at low volumes. | *LOUDNESS ON* |
| **TONE** (Tone Control) | Applies the treble and bass tone controls to a source, or bypasses them completely. | **BYPASS** / *ON* |
| **BASS**[a] | Adjusts the amount of bass. | –6 to +6 (dB) Default: **0** (dB) |
| **TREBLE**[a] | Adjusts the amount of treble. | –6 to +6 (dB) Default: **0** (dB) |
| **S.RTRV** (Sound Retriever) | With the Sound Retriever function, DSP processing is used to compensate for the loss of audio data upon compression, improving the sound's sense of density and modulation. | **OFF**[b] / *ON* |
| **DNR** (Digital Noise Reduction) | May improve the quality of sound in a noisy source (for example, video tape with lots of background noise) when switched on. | **OFF** / *ON* |
| **DIALOG E** (Dialog Enhancement) | Localizes dialog in the center channel to make it stand out from other background sounds in a TV or movie soundtrack. By moving from UP1 through UP2 and UP3 up to UP4, you can make the sound source seem to relocate upwards. | **OFF** / *FLAT* / *UP1/UP2/UP3/ UP4*[c] |
| **DUAL** (Dual Mono) | Specifies how dual mono encoded Dolby Digital soundtracks should be played. Dual mono is not widely used, but is sometimes necessary when two languages need to be sent to separate channels. | **CH1** – Channel 1 is heard only / *CH2* – Channel 2 is heard only / *CH1 CH2* – Both channels heard from front speakers |
| **DRC** (Dynamic Range Control) | Adjusts the level of dynamic range for movie soundtracks optimized for Dolby Digital, DTS, Dolby Digital Plus, Dolby TrueHD, DTS-HD and DTS-HD Master Audio (you may need to use this feature when listening to surround sound at low volumes). | **AUTO**[d] / *MAX* / *MID* / *OFF* |

| Setting | What it does | Option(s) |
|---|---|---|
| **LFE** (LFE Attenuate) | Some audio sources include ultra-low bass tones. Set the LFE attenuator as necessary to prevent the ultra-low bass tones from distorting the sound from the speakers.<br>The LFE is not limited when set to 0 dB, which is the recommended value. When set to –5 dB, –10 dB, –15 dB or –20 dB, the LFE is limited by the respective degree. When OFF is selected, no sound is output from the LFE channel. | **0dB**/ *–5dB/ –10dB/ –15dB/ –20dB*<br>*OFF* |
| **SACD GAIN**[e] | Brings out detail in SACDs by maximizing the dynamic range (during digital processing). | **0dB**<br>*+6 dB* |
| **HDMI**[f] (HDMI Audio) | Specifies the routing of the HDMI audio signal out of this receiver (*amp*) or *through* to a TV. When THROUGH is selected, no sound is output from this receiver. | **AMP**<br>*THROUGH* |
| **A. DELAY** (Auto delay) | This feature automatically corrects the audio-to-video delay between components connected with an HDMI cable. The audio delay time is set depending on the operational status of the display connected with an HDMI cable. The video delay time is automatically adjusted according to the audio delay time.[g] | **OFF**<br>*ON* |
| **C. WIDTH**[h] (Center Width) (Applicable only when using a center speaker) | Provides a better blend of the front speakers by spreading the center channel between the front right and left speakers, making it sound wider (higher settings) or narrower (lower settings). | 0 to 7<br>Default: **3** |
| **DIMENSION**[h] | Adjusts the depth of the surround sound balance from front to back, making the sound more distant (minus settings), or more forward (positive settings). | –3 to +3<br>Default: **0** |
| **PANORAMA**[h] | Extends the front stereo image to include the surround speakers for a 'wraparound' effect. | **OFF**<br>*ON* |
| **C. IMAGE**[i] (Center Image) (Applicable only when using a center speaker) | Adjusts the center image to create a wider stereo effect with vocals. Adjust the effect from **0** (all center channel sent to front right and left speakers) to **10** (center channel sent to the center speaker only). | 0 to 10<br>Defaults:<br>Neo:6 MUSIC: **3**<br>Neo:6 CINEMA: **10** |
| **EFFECT** | Sets the effect level for the currently selected Advanced Surround or ALC mode (each mode can be set separately). | 10 to 90 |
| **H.GAIN** (Height Gain) | Adjusts the output from the front height speaker when listening in **DOLBY PLIIz HEIGHT** mode. If set to **HIGH**, the sound from the top will be more emphasized. | *LOW*<br>**MID**<br>*HIGH* |
| **V.SB** (Virtual Surround Back) | When you're not using surround back speakers, selecting this mode allows you to hear a virtual surround back channel through your surround speakers. You can choose to listen to sources with no surround back channel information, or if the material sounds better in the format (for example, 5.1) for which it was originally encoded, you can have the receiver only apply this effect to 6.1 encoded sources like Dolby Digital EX or DTS-ES.[j] | **OFF**<br>*ON* |
| **V.HEIGHT** (Virtual Front Height) | When you're not using front height speakers, selecting this mode allows you to hear a virtual front height channel through your front speakers.[k] | **OFF**<br>*ON* |

a. The adjustment can be made only when **TONE** is set to **ON**.
b. With the **iPod/USB**, **INTERNET RADIO** or **ADAPTER PORT** input function, by default **S.RTRV** is set to **ON**.
c. UP1 to UP4 can be selected only when the front height speaker is connected. The presence or absence of effects depends on the listening mode.
d. The initially set **AUTO** is only available for Dolby TrueHD signals. Select **MAX** or **MID** for signals other than Dolby TrueHD.
e. You shouldn't have any problems using this with most SACD discs, but if the sound distorts, it is best to switch the gain setting back to **0** dB.
f. • The HDMI Audio setting cannot be switched while performing synchronized amp mode operations.
• The synchronized amp mode must be turned on in order to play the receiver's HDMI audio and video input signals from the TV with the receiver's power in the standby mode. See *About synchronized operations* on page 57.
g. This feature is only available when the connected display supports the automatic audio/video synchronizing capability ('lipsync') for HDMI. If you find the automatically set delay time unsuitable, set **A. DELAY** to **OFF** and adjust the delay time manually. For more details about the lipsync feature of your display, contact the manufacturer directly.
h. Only when listening to 2-channel sources in Dolby Pro Logic IIx Music/Dolby Pro Logic II Music mode.
i. Only when listening to 2-channel sources in Neo:6 MUSIC/CINEMA mode.
j. • You can't use the Virtual Surround Back mode when the headphones are connected to this receiver or when any of the stereo, Front Stage Surround Advance, Sound Retriever Air or Stream Direct modes is selected.
• You can only use the Virtual Surround Back mode if the surround speakers are on and the **SB** setting is set to **NO** or if **Front Bi-Amp** or **ZONE 2** is selected at Speaker System. It can also be used when **Speaker B** is selected at Speaker system and **SP▶AB** is selected with the **SPEAKERS** button.
• When inputting Dolby True HD, DTS-HD or DTS Express audio signals, the Virtual Surround Back mode cannot be used if no surround signals are recorded in the source.

k. • You can't use the Virtual Front Height mode when the headphones are connected to this receiver or when any of the stereo, Front Stage Surround Advance, Sound Retriever Air or Stream Direct modes is selected.
• The Virtual Front Height mode cannot be used when no surround speaker is connected.
• When inputting Dolby True HD, DTS-HD or DTS Express audio signals, the Virtual Front Height mode cannot be used if no surround signals are recorded in the source.

## Setting the Video options

There are a number of additional picture settings you can make using the **VIDEO PARAMETER** menu. The defaults, if not stated, are listed in bold.

### Important

- Note that if an option cannot be selected on the **VIDEO PARAMETER** menu, it is unavailable due to the current source, setting and status of the receiver.
- All of the setting items can be set for each input function.
- Setting items other than **V. CONV** can only be selected when **V. CONV** is set to **ON**.

**1 Press RECEIVER, then press VIDEO PARAMETER.**

**2 Use ↑/↓ to select the setting you want to adjust.**
Depending on the current status/mode of the receiver, certain options may not be able to be selected. Check the table below for notes on this.

**3 Use ←/→ to set as necessary.**
See the table below for the options available for each setting.

**4 Press RETURN to confirm and exit the menu.**

| Setting | What it does | Option(s) |
|---|---|---|
| **V. CONV**[a] (Digital Video Conversion) | Converts video signals for output from the **MONITOR OUT** jacks (including **HDMI OUT** connector) for all video types (see page 22). | **ON**<br>*OFF* |
| **RES**[b] (Resolution) | Specifies the output resolution of the video signal (when video input signals are output at the **HDMI OUT** connector, select this according to the resolution of your monitor and the images you wish to watch). | **AUTO**<br>*PURE*<br>*480p/576p*<br>*720p*<br>*1080i*<br>*1080p*<br>*1080/24p* |
| **ASP**[c] (Aspect) | Specifies the aspect ratio when input signals are output at the HDMI output. Make your desired settings while checking each setting on your display (if the image doesn't match your monitor type, cropping or black bands appear). | **THROUGH**<br>*NORMAL* |
| **PCINEMA**[d,e] (PureCinema) | This setting optimizes the operation of the progressive scanning circuit for playing film materials. Normally set it to **AUTO**. If the picture seems unnatural, switch this to **ON** or **OFF**. | **AUTO**<br>*ON*<br>*OFF* |
| **P.MOTION**[d,e] (Progressive Motion) | Adjusts the motion and still picture quality when video output is set to progressive. | –4 to +4<br>Default: **0** |
| **YNR**[d] | Reduces noise in the luminance (Y) signal. | 0 to +8<br>Default: **0** |
| **CNR**[d] | Reduces noise in the input's color (C) signal. | 0 to +8<br>Default: **0** |
| **BNR**[d] | Reduces block noise (block-shaped distortion generated upon MPEG compression) in the picture. | 0 to +8<br>Default: **0** |
| **MNR**[d] | Reduces mosquito noise (distortion generated at the contours of the picture upon MPEG compression) in the picture. | 0 to +8<br>Default: **0** |
| **DETAIL**[d] | Adjusts how sharp edges appear. | 0 to +8<br>Default: **0** |
| **BRIGHT**[d] (Brightness) | Adjusts the overall brightness. | –6 to +6<br>Default: **0** |
| **CONTRAST**[d] | Adjusts the contrast between light and dark. | –6 to +6<br>Default: **0** |
| **HUE**[d] | Adjusts the red/green balance. | –6 to +6<br>Default: **0** |
| **CHROMA**[d] (Chroma Level) | Adjusts saturation from dull to bright. | –6 to +6<br>Default: **0** |
| **BLK SETUP**[f] | Corrects the black depth in the brightness signal.<br>Normally select **7.5**. If the dark parts of the picture are all black with this setting, select **0**. | **7.5**<br>*0* |

a. If the video picture deteriorates when this settings is switched **ON**, switch it **OFF**.

b. • When set to a resolution with which the TV (monitor) is not compatible, no picture is output. Also, in some cases no picture will be output due to copyright protection signals. In this case, change the setting.
• When **AUTO** is selected, the resolution is selected automatically according to the capacity of the TV (monitor) connected by HDMI. When **PURE** is selected, the signals are output with the same resolution as when input (see *About the video converter* on page 22).
• If this is set to something other than **AUTO**, **PURE** and 480i/576i analog signals are input, 480p/576p signals are output from the component output terminals.

c. • If the image doesn't match your monitor type, adjust the aspect ratio on the source component or on the monitor.
• This setting is only displayed when 480i/p or 576i/p video signals are being input.

d.This setting is only displayed when the video signals below are being input:
• 480i, 576i, 480p, 576p, 720p, 1080i analog video signals
• 480i, 576i, 480p, 576p, 720p, 1080i, 1080p, 1080p24 HDMI video signals
e. • This setting is valid for component outputs and HDMI output.
• This setting have the effect only for pictures recorded in the interlaced scan format (480i/576i or 1080i signals).
• **P.MOTION** is disabled when **PCINEMA** is set to **ON**.
f. You can't use this setting when the HDMI or component video signals are being input.

## Switching the speaker terminals

If you selected **Speaker B** at *Speaker system setting* on page 83, you can switch between speakers using the **SPEAKERS** button. If you selected **Normal(SB/FH)**, **Normal(SB/FW)**, **Front Bi-Amp** or **ZONE 2**, the button will simply switch your main speaker terminals on or off. The options below are for the **Speaker B** setting only.[1]

• **Use SPEAKERS on the front panel to select a speaker system setting.**

As mentioned above, if you have selected **Normal(SB/FH)** or **Normal(SB/FW)**, the button will simply switch your main speaker terminal (A) on or off.

Press repeatedly to choose a speaker terminal option:

- **SP►A** – Sound is output from the A-speaker terminals (up to 7 channels (including surround back channels), depending on the source).
- **SP►B** – Sound is output from the two speakers connected to the B-speaker terminals. Multichannel sources will not be heard.
- **SP►AB** – Sound is output from the A-speaker terminals (up to 5 channels, depending on the source), the two speakers connected to the B-speaker terminals, and the subwoofer. The sound from the B-speaker terminals will be the same as the sound from the A-speaker terminals (multichannel sources will be downmixed to 2 channels).
- **SP►** (off) – No sound is output from the speakers.

## Using the MULTI-ZONE controls

The following steps use the front panel controls to adjust the sub zone volume and select sources. See *MULTI-ZONE remote controls* on page 63.

**Important**

- The explanations for ZONE 3 below only apply to the VSX-1325.

**1 Press MULTI-ZONE ON/OFF on the front panel.**

Each press selects a MULTI-ZONE option:

- **ZONE 2 ON** – Selects your primary (**ZONE 2**) sub zone
- **ZONE 2&3 ON**[2] – Select both sub zones
- **ZONE 3 ON**[2] – Selects your secondary (**ZONE 3**) sub zone
- **MULTI ZONE OFF** – Switches the MULTI-ZONE feature off

The **MULTI-ZONE** indicator lights when the MULTI-ZONE control has been switched ON.

**2 Press MULTI-ZONE CONTROL on the front panel to select the sub zone(s) you want.**

If you selected **ZONE 2&3 ON** above, you can toggle between **ZONE 2** and **ZONE 3**.

- When the receiver is on,[3] make sure that any operations for the sub zone are done while **ZONE** and your selected sub zone(s) show in the display. If this is not showing, the front panel controls affect the main zone only.

**3 Use the INPUT SELECTOR dial to select the source for the zone you have selected.**

For example, **ZONE 2 CD-R** sends the source connected to the **CD-R** inputs to the primary (**ZONE 2**) sub room.

- If you select **TUNER**, you can use the tuner controls to select a preset station (see *Saving station presets* on page 45 if you're unsure how to do this).[4]

**4 When Speaker System is set to ZONE 2, use the MASTER VOLUME dial to adjust the volume for the sub zone.**

**5 When you're finished, press MULTI-ZONE CONTROL again to return to the main zone controls.**

You can also press **MULTI-ZONE ON/OFF** on the front panel to switch off all output to the sub zone(s).[5]

**Note**

1 • The subwoofer output depends on the settings you made in *Manual speaker setup* on page 82. However, if **SP►B** is selected above, no sound is heard from the subwoofer (the LFE channel is not downmixed).
• All speaker systems (except **Speaker B** connections) are switched off when headphones are connected.
2 This can only be selected on the VSX-1325.
3 If the receiver is in standby, the display is dimmed, and **ZONE** and your selected sub zone(s) continue to show in the display.
4 The tuner cannot be tuned to more than one station at a time. Therefore, changing the station in one zone also changes the station in the other zone. Please be careful not to change stations when recording a radio broadcast.
5 • You won't be able to switch the main zone off completely unless you've switched off the MULTI-ZONE control first.
• If you don't plan to use the MULTI-ZONE feature for a while, turn off the power in both the sub and main rooms so that this receiver is in standby.

**MULTI-ZONE remote controls**

Set the MULTI-ZONE operation switch to **ZONE 2** or **ZONE 3** to operate the corresponding zone.

The following table shows the possible MULTI-ZONE remote controls:

| Button | What it does |
|---|---|
| ⏻ | Switches on/off power in the sub zone. |
| **INPUT SELECT** | Use to select the input function in the sub zone. |
| Input function buttons | Use to select the input function directly (this may not work for some functions) in the sub zone. |
| **MASTER VOLUME +/–** | Use to set the listening volume in the sub zone.[a] |
| **MUTE** | Mutes the sound or restores the sound if it has been muted (adjusting the volume also restores the sound).[a] |

a.You can only use this button when **Speaker System** is set to **ZONE 2**.

## Making an audio or a video recording

You can make an audio or a video recording from the built-in tuner, or from an audio or video source connected to the receiver (such as a CD player or TV).[1]

Keep in mind you can't make a digital recording from an analog source or vice-versa, so make sure the components you are recording to/from are hooked up in the same way (see *Connecting your equipment* on page 15 for more on connections).

Since the video converter is not available when making recordings (from the video **OUT** jacks) make sure to use the same type of video cable for connecting your recorder as you used to connect your video source (the one you want to record) to this receiver. For example, you must connect your recorder using Component video if your source has also been connected using Component video.

**1 Select the source you want to record.**

Use the input function buttons (or **INPUT SELECT**).

**2 Prepare the source you want to record.**

Tune to the radio station, load the CD, video, DVD etc.

**3 Select the input signal according to the signal to be recorded.**

Use the remote control's **SIGNAL SEL** button.

**4 Prepare the recorder.**

Insert a blank tape, MD, video etc. into the recording device and set the recording levels. Refer to the instructions that came with the recorder if you are unsure how to do this. Most video recorders set the audio recording level automatically—check the component's instruction manual if you're unsure.

**5 Start recording, then start playback of the source component.**

## Reducing the level of an analog signal

The input attenuator lowers the input level of an analog signal when it's too strong. You can use this if you find that the **OVER** indicator lights often or you can hear distortion in the sound.[2]

- **Press RECEIVER, then press A.ATT to switch the input attenuator on or off.**

## Using the sleep timer

The sleep timer switches the receiver into standby after a specified amount of time so you can fall asleep without worrying about the receiver being left on all night. Use the remote control to set the sleep timer.

- **Press RECEIVER, then press SLEEP repeatedly to set the sleep time.**

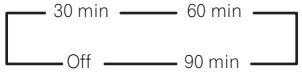


- You can check the remaining sleep time at any time by pressing **SLEEP** once. Pressing repeatedly will cycle through the sleep options again.[3]

## Dimming the display

You can choose between four brightness levels for the front panel display. Note that when selecting sources, the display automatically brightens for a few seconds.

- **Press RECEIVER, then press DIMMER repeatedly to change the brightness of the front panel display.**

**Note**

1 • The receiver's volume, Audio parameters (the tone controls, for example), and surround effects have no effect on the recorded signal.
• Some digital sources are copy-protected, and can only be recorded in analog.
• Some video sources are copy-protected. These cannot be recorded.

2 The attenuator isn't available with digital sources, or when using the Stream Direct (ANALOG DIRECT) modes.

3 The sleep timer is valid for all zones. If any zone is on, the sleep timer continues functioning.

## Switching the HDMI output

*(VSX-1325 only)*

Set which terminal to use when outputting video and audio signals from the HDMI output terminals.

The HDMI OUT1 terminal is compatible with the **Control** with HDMI function.

- **Press RECEIVER, then press HDMI OUT.**

Please wait a while when **Please wait ...** is displayed.

The output switches among **HDMI OUT ALL**, **HDMI OUT 1** and **HDMI OUT 2** each time the button is pressed.[1]

## Using the Web Control function

The receiver can be operated using a browser from a computer connected on the same LAN as the receiver.

**1 Turn on the computer and launch the Internet browser.**

**2 In the address bar on the browser, enter the IP address assigned to this receiver.**

For example, if the IP address of this receiver is "192.168.0.2", enter "http://192.168.0.2/".

When the connection is made with the receiver, a **Top Menu** will be displayed.

This receiver's IP address can be found in the 'IP address, Proxy' menu (page 85).

**3 Once the Top Menu is displayed, click the button for the zone you want to operate.**

**4 Operate from the screen for the individual zone.**

- Even when the receiver is in the standby mode, it can be turned on using the **Web Control** function. For details, see *Network Standby* on page 86.

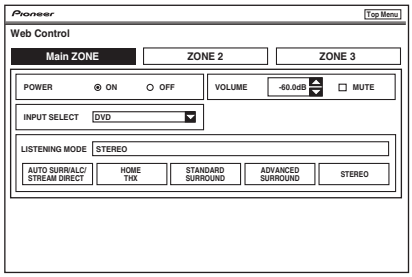


## Checking your system settings

Use the status display screen to check your current settings for features such as surround back channel processing and your current MCACC preset.

**1 Press RECEIVER, then press STATUS to check the system settings.**

The front panel display shows each of the following settings for three seconds each: **Input function**, **Sampling Frequency**, **MCACC preset**, **ZONE 2 input**, **ZONE 3 input**[2] and **HDMI OUT**.

**2 When you're finished, press STATUS again to switch off the display.**

## Resetting the system

Use this procedure to reset all the receiver's settings to the factory default. Use the front panel controls to do this. Set **MULTI-ZONE** to **OFF**.

- Disconnect the iPod and USB memory device from the receiver beforehand.

**1 Switch the receiver into standby.**

**2 While holding down ENTER on the front panel, press ⏻ STANDBY/ON.**

The display shows **RESET ◄ NO ►**.

**3 Select 'RESET' using PRESET ⬅/➡, then press ENTER on the front panel.**

The display shows **RESET? OK**.

**4 Press ENTER to confirm.**

**OK** appears in the display to indicate that the receiver has been reset to the factory default settings.

- Note that all settings will be saved, even if the receiver is unplugged.

**Note**

1 • The synchronized amp mode is canceled when the HDMI output is switched. If you wish to use the synchronized amp mode, switch to **HDMI OUT 1**, then select the synchronized amp mode on the TV using the TV's remote control.

• When the power is turned off then back on after switching the HDMI output, the input is set to a setting between HDMI1 and HDMI3, or BD.

2 The ZONE 3 input are only displayed for the VSX-1325.

## Default system settings

| Setting | | Default |
|---|---|---|
| Digital Video Conversion | | ON |
| SPEAKERS | | A |
| Speaker System | | Normal (SB/FH) |
| Speaker Setting | Front | SMALL |
| | Center | SMALL |
| | FH/FW | SMALL |
| | Surr | SMALL |
| | SB | SMALLx2 |
| | SW | YES |
| Surround Position | | IN REAR |
| Crossover | | 80 Hz |
| X-Curve | | OFF |
| THX Audio Setting | | 4 ft< |
| DIMMER | | Brightest |
| Network Standby | | OFF |
| **Inputs** | | |
| See *Input function default and possible settings* on page 40. | | |
| **HDMI** | | |
| HDMI Audio | | Amp |
| HDMI output (VSX-1325 only) | | HDMI OUT ALL |
| Control | | ON |
| Control Mode | | ALL |
| DIsplay Power Off | | YES |

| Setting | | Default |
|---|---|---|
| **DSP** | | |
| Power On Level | | LAST |
| Volume Limit | | OFF |
| Mute Level | | FULL |
| Phase Control | | ON |
| Sound Retriever | iPod/USB, INTERNET RADIO, ADAPTER PORT function | ON |
| | Other functions | OFF |
| Sound Delay | | 0.0 frame |
| Dual Mono | | CH1 |
| DRC | | AUTO |
| SACD Gain | | 0 dB |
| LFE Attenuate | | 0 dB |
| Auto delay | | OFF |
| Digital Safety | | OFF |
| Effect Level | ExtendedStereo | 90 |
| | Other modes | 50 |
| DD PL II Music Options | Center Width | 3 |
| | Dimension | 0 |
| | Panorama | OFF |
| Neo:6 Options | Center Image | Neo:6 MUSIC: 3<br>Neo:6 CINEMA: 10 |
| All Inputs | Listening Mode (2 ch/multi ch) | AUTO SURROUND |
| | Listening Mode (HP) | STEREO |
| See also *Setting the Audio options* on page 59 for other default DSP settings. | | |
| **MCACC** | | |
| MCACC Position Memory | | M1: MEMORY 1 |
| Channel Level (M1 to M6) | | 0.0 dB |
| Speaker Distance (M1 to M6) | | 10.00 ft |
| Standing Wave (M1 to M6) | ATT of all channels/ filters | 0.0 dB |
| | SWch Wide Trim | 0.0 dB |
| EQ Data (M1 to M6) | All channels/bands | 0.0 dB |
| | EQ Wide Trim | 0.0 dB |

Chapter 9:
# Controlling the rest of your system

## Operating multiple receivers

Up to four receivers can be operated discretely using this receiver's remote control when using multiple receivers, provided they are of the same model as this receiver. The receiver to be operated is switched by inputting the preset code to set the remote control setting.

- Set the remote modes on the receivers before using this function (see *Remote Control Mode Setup* on page 87).

**1 Press and hold R.SETUP, then press "4" for three seconds.**
The LED flashes continuously.

- To cancel the preset setup mode press **R.SETUP**.

**2 Press the number button for the receiver ("Receiver 1" to "Receiver 4") you wish to operate.**
For example, to operate "Receiver 2", press "**2**".

If the LED lights for one second, the setting has been successfully completed.

When the preset code is input, the LED flashes three times to indicate that the setting has failed.

## Setting the remote to control other components

Most components can be assigned to one of the input function buttons (such as **DVD** or **CD**) using the component's manufacturer preset code stored in the remote.

However, there are cases where only certain functions may be controllable after assigning the proper preset code, or the codes for the manufacturer in the remote control will not work for the model that you are using.

If you can't find a preset code that matches the component you want to control, you can still teach the remote individual commands from another remote control (see *Programming signals from other remote controls* on page 67).

**Note**

- You can cancel or exit any of the steps by pressing **R.SETUP**.
- After one minute of inactivity, the remote automatically exits the operation.
- For greater convenience, assign the TV connected to the MONITOR OUT terminal to the **TV CTRL** button, and assign your satellite/cable receiver or set-top box connected to the TV input terminal to the **TV** input button. If a single device is connected to both terminals, that device should be assigned to both the **TV CTRL** and **TV** input buttons.
- Devices may be assigned to the following input function buttons.

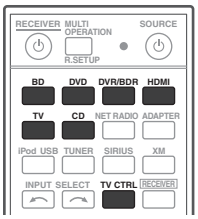


## Selecting preset codes directly

**1 Press and hold R.SETUP, then press "1" for three seconds.**
The LED flashes continuously.

- To cancel the preset setup mode press **R.SETUP**.

**2 Press the input function button for the component you want to control.**
When assigning preset codes to **TV CONTROL**, press **TV CTRL** here.

The LED blinks once and flashes continuously.

**3 Use the number buttons to enter the 4-digit preset code.**
See *Preset code list* on page 104.

If the LED lights for one second, the setting has been successfully completed.

When the preset code is fully input, the LED flashes three times to indicate that the setting has failed. If this happens, enter the 4-digit preset code again.

**4 Repeat steps 2 through 3 for the other components you want to control.**
To try out the remote control, switch the component on or off (into standby) by pressing ⏻ **SOURCE**. If it doesn't seem to work, select the next code from the list (if there is one).

**5 Press R.SETUP to exit the preset setup mode.**

## Programming signals from other remote controls

If the preset code for your component is not available, or the available preset codes do not operate correctly, you can program signals from the remote control of another component. This can also be used to program additional operations (buttons not covered in the presets) after assigning a preset code.[1]

Certain buttons represent operations that cannot be learned from other remote controls. The buttons available are shown below:

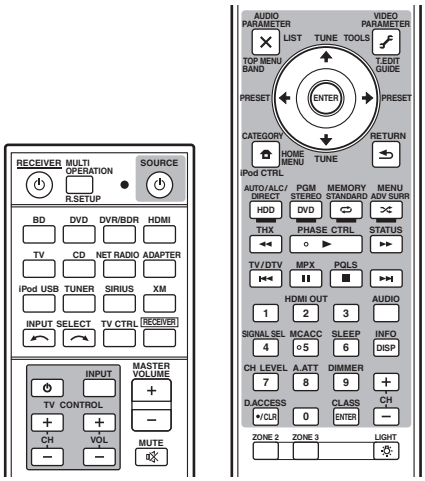


**1 Press and hold R.SETUP, then press "2" for three seconds.**

The LED flashes continuously.

- To cancel the preset setup mode press **R.SETUP**.

**2 Press the input function button for the component you want to control.**

The LED blinks once and flashes continuously.

**3 Point the two remote controls towards each other, then press the button that will be doing the learning on this receiver's remote control.**

The LED blinks once and flashes continuously.

- The remote controls should be 3 cm (1 inch) apart.

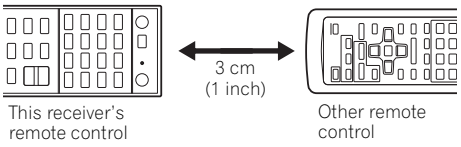


**4 Press the corresponding button on the other remote control that is sending (teaching) the signal to this receiver's remote control.**

If the LED lights for one second, the setting has been successfully completed.[2]

**5 To program additional signals for the current component repeat steps 3 and 4.**

To program signals for another component, exit and repeat steps 2 through 4.

**6 Press R.SETUP to exit the programming mode.**

## Erasing one of the remote control button settings

This erases one of the buttons you have programmed and restores the button to the factory default.

**1 Press and hold R.SETUP, then press "7" for three seconds.**

The LED flashes continuously.

- To cancel the preset setup mode press **R.SETUP**.

**2 Press the input function button corresponding to the command to be erased, then press ENTER.**

The LED flashes once.

**3 Press and hold the button to be erased for three seconds.**

If the LED lights for one second, the erasing has been successfully completed.

**4 Repeat step 3 to erase other buttons.**

**5 Press R.SETUP to exit the erasing mode.**

**Note**

1 The remote can store about 120 preset codes from other components (this has been tested with codes of Pioneer format only).

2 • Note that interference from TVs or other devices will sometimes result in the remote control learning the wrong signal.
• Some commands from other remote controls cannot be learned, but in most cases the remotes just need to be moved closer together or farther apart.
• If the LED flashes for five seconds, it means the memory is full. See *Erasing all learnt settings that are in one input function* on page 68 to erase a programmed button you're not using to free up more memory (note that some signals may take more memory than others).

## Erasing all learnt settings that are in one input function

This operation erases all the operational settings of other devices that have been programmed in one input function, and restores the factory default.

This function is handy for erasing all data programmed for devices no longer being used.

**1 Press and hold R.SETUP, then press "9" for three seconds.**
The LED flashes continuously.

- To cancel the preset setup mode press **R.SETUP**.

**2 Press and hold the input function button corresponding to the command to be erased for three seconds.**
If the LED lights for one second, the erasing has been successfully completed.

## Direct function

- Default setting: **On**

You can use the direct function feature to control one component using the remote control while at the same time using your receiver to play a different component. This could let you, for example, use the remote control to set up and listen to a CD on the receiver, and then use the remote control to rewind a tape in your VCR while you continue to listen to your CD player.

When direct function is on, any component you select (using the input function buttons) will be selected by both the receiver and the remote control. When you turn direct function off, you can operate the remote control without affecting the receiver.

**1 Press and hold R.SETUP, then press "5" for three seconds.**
The LED flashes continuously.

- To cancel the preset setup mode press **R.SETUP**.

**2 Press the input function button for the component you want to control.**

**3 Press "1" (On) or "0" (Off) to switch the direct function mode.**
If the LED lights for one second, the setting has been successfully completed.

If the LED flashes three times, the setting has failed.

**4 Press R.SETUP to exit the setup.**

## Setting the backlight mode

- Default setting: **1 (normal mode)**

The backlight lighting pattern can be selected from among four modes, in consideration of convenience and battery service life.

**1 Press and hold R.SETUP, then press "6" for three seconds.**
The LED flashes continuously.

- To cancel the preset setup mode press **R.SETUP**.

**2 Press the number button for the backlight mode you want to set.**

- **"1" (normal mode)** – The backlight is turned on and off with the light button. After it lights, it turns off automatically if no operation is performed for 10 seconds.
- **"2" (frequent lighting mode)** – The backlight turns on when any button on the remote control is pressed. It is turned off with the light button. After it lights, it turns off automatically if no operation is performed for 10 seconds.
- **"3" (eco mode)** – The backlight is turned on and off with the light button. After it lights, it turns off automatically if no operation is performed for 5 seconds.
- **"4" (off mode)** – The backlight does not turn on even when the light button is pressed.

If the LED lights for one second, the setting has been successfully completed.

If the LED flashes three, the setting has failed.

**3 Press R.SETUP to exit the setup.**

## Multi operation and System off

The Multi operation feature allows you to program a series of up to 5 commands for the components in your system.

- Be sure to call up the preset codes of devices or perform programming signals for other remote controls before multi operation memory programming (page 67).

The Multi operation feature makes it easy to perform the following operations by pressing just two buttons.

Press **MULTI OPERATION** and then the **DVD** input function button to:

1. Switch this receiver on.
2. Switch this receiver's input to DVD.
3. Transmit a sequence of up to five programmed commands.

Similar to Multi operations, System off allows you to use two buttons to stop and switch off a series of components in your system at the same time.[1] Only one System off operation sequence may be programmed.

Press **MULTI OPERATION** and then ⏻ **SOURCE** to:

1. Transmit a sequence of up to five programmed commands.
2. Switch off all Pioneer devices including the receiver (except DVD recorders and VCRs).

For greater convenience, program this receiver to perform power on/off and playback operations on non-Pioneer devices as well.[2] (The signals for Pioneer devices described above are not contingent on programming for non-Pioneer devices.)

The buttons that can be programmed using Multi operation or System off are the same buttons as those that can be programmed for other remote controls (see *Programming signals from other remote controls* on page 67).

## Programming a Multi operation or a shutdown sequence

**1 Press and hold R.SETUP, then press "3" for three seconds.**
The LED flashes continuously.

- To cancel the preset setup mode press **R.SETUP**.

**2 Press the input function button (or ⏻ SOURCE button).**
*For Multi operations,* press the input function you wish to program (for example, if you want to start the sequence by switching on your DVD player, press **DVD**)[3].

*For System off,* press the ⏻ **SOURCE** button.

The LED blinks twice and flashes continuously.

**3 If necessary, press the input function button for the component whose command you want to input.**
This is only necessary if the command is for a new component (input function).

**4 Select the button for the command you want to input.**
The LED blinks once and flashes continuously.

- You don't need to program the receiver to switch on or off. This is done automatically.

With Pioneer components, you don't need to program the power to switch off in a shutdown sequence (except DVD recorders).

**5 Repeat steps 3 to 4 to program a sequence of up to five commands.**
If you press **R.SETUP** before programming is completed, commands programmed up to that point will be stored.

**6 Press R.SETUP to exit the programming mode.**

## Using multi operations

**1 Press MULTI OPERATION.**
The LED flashes continuously.

**2 Within five seconds, press an input function button that has been set up with a multi operation.**
The receiver switches on (if it was in standby) and the programmed multi operation is performed automatically.

## Using System off

**1 Press MULTI OPERATION.**
The LED flashes continuously.

**2 Within five seconds, press ⏻ SOURCE.**
The command sequence you programmed will run, then all Pioneer components will switch off[4], followed by this receiver (switch of all the zones becomes off).

## Erasing the settings for the multi-operation

This erases all the settings programmed in the remote control for the multi-operation.

**1 Press and hold R.SETUP, then press "8" for three seconds.**
The LED flashes continuously.

- To cancel the preset setup mode press **R.SETUP**.

**2 Press the input function button containing the program you want to cancel or the ⏻ SOURCE button for three seconds.**
If the LED lights for one second, the erasing has been successfully completed.

**Note**

1 • Before Multi operation and System off will work correctly, you must setup the remote to work with your TV and other components (see *Operating multiple receivers* on page 66 for more on this).
• Some units may take some time to power up, in which case multiple operations may not be possible.
• Power on and off commands only work with components that have a standby mode.

2 Some remote controllers for other manufacturers' devices use the same signals for switching the power on and off. In some cases, even if this receiver is programmed to perform these commands, power to the non-Pioneer devices may not be switched on and off correctly. Program the receiver to perform these commands if the non-Pioneer device uses separate signals for power on/off.

3 With Multi operation, the **HDMI** and **TV CTRL** settings cannot be made. For other settable input functions, see *Setting the remote to control other components* on page 66.

4 In order to avoid accidently switching off a DVD recorder that is currently recording, no DVD recorder power off codes are sent.

## Resetting the remote control settings

Use this procedure to reset all the remote control's settings to the factory default.[1]

**1 Press and hold R.SETUP, then press "0" for three seconds.**
The LED flashes continuously.

**2 Press and hold the ENTER button for three seconds.**
If the LED lights for one second, the erasing has been successfully completed.

### Default preset codes

| Input function button | Preset code |
|---|---|
| **DVD** | 2158 |
| **BD** | 2160 |
| **DVR/BDR** | 2150 |
| **HDMI** | 2159 |
| **TV** | 0116 |
| **CD** | 5066 |
| **TV CTRL** | 0116 |

## Controlling components

This remote control can control components after entering the proper codes (see *Setting the remote to control other components* on page 66 for more on this). Use the input function buttons to select the component.

- The **TV CONTROL** buttons on the remote control are dedicated to control the TV assigned to the **TV CTRL** button. If you have two TVs, assign the main TV to the **TV CTRL** button.

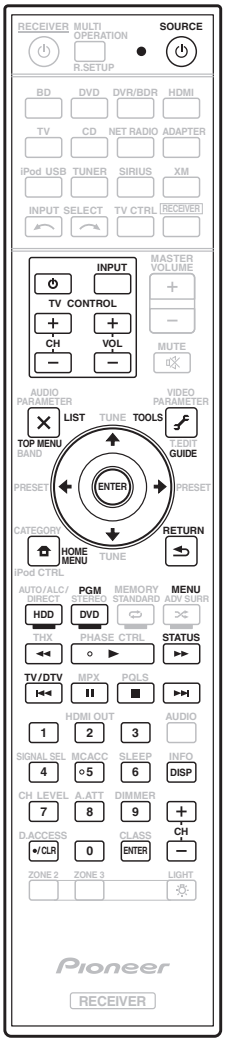


**Note**

1 When preset codes are set, all the signals learned in the input function buttons are cleared. This function is convenient when you want to reset some but not all of input function buttons.

| Button(s) | TV | TV (Monitor) | BD/DVD | HDD/DVR | VCR | SAT/CATV |
|---|---|---|---|---|---|---|
| ⏻ **SOURCE** | POWER ON/OFF | POWER ON/OFF | POWER ON/OFF | POWER ON/OFF | POWER ON/OFF | POWER ON/OFF |
| Number buttons | *numerics* | *numerics* | *numerics* | *numerics* | *numerics* | *numerics* |
| • *(dot)* | • *(dot)* | KURO LINK | CLEAR | + | - | ✳ |
| **ENTER** (CLASS) | ENTER | CH ENTER | ENTER | ENTER | - | ENTER |
| ✕ | EXIT/INFO | EXIT | TOP MENU | TOP MENU | - | LIST |
| 🔧 | TOOLS/GUIDE/ EPG | USER MENU | TOOLS | GUIDE | - | GUIDE |
| ↑/↓/←/→ | ↑/↓/←/→ | ↑/↓/←/→ | ↑/↓/←/→ | ↑/↓/←/→ | - | ↑/↓/←/→ |
| **ENTER** | ENTER | ENTER | ENTER | ENTER | - | ENTER |
| 🏠 | HOME MENU | HOME MENU | HOME MENU | HOME MENU | - | HOME / MENU |
| ⮌ | RETURN | RETURN | RETURN | RETURN | - | RETURN |
| **HDD** *(Red)* | *Red* | *Red* | - | HDD | - | *Red* |
| **DVD** *(Green)* | *Green* | *Green* | - | DVD | - | *Green* |
| ⟲ *(Yellow)* | *Yellow* | *Yellow* | - | VCR | - | *Yellow* |
| ⤮ *(Blue)* | *Blue* | *Blue* | MENU | MENU | - | *Blue* |
| ▶ | - | - | ▶ | ▶ | ▶ | ▶ |
| ⏸ | - | AUTO SETUP | ⏸ | ⏸ | ⏸ | ⏸ |
| ■ | - | FREEZE | ■ | ■ | ■ | ■ |
| ◀◀ | - | - | ◀◀ | ◀◀ | ◀◀ | ◀◀ |
| ▶▶ | - | - | ▶▶ | ▶▶ | ▶▶ | ▶▶ |
| ⏮ | ANT | AV SELECTION | ⏮ | ⏮ | - | ⏮ |
| ⏭ | - | SCREEN SIZE | ⏭ | ⏭ | - | ⏭ |
| **AUDIO** | AUDIO | AUDIO | AUDIO | AUDIO | AUDIO | AUDIO |
| **DISP** | DISPLAY | DISPLAY | DISPLAY | DISPLAY | - | DISPLAY/INFO |
| **CH +/–** | CH+/– | CH+/– | OUTPUT RESOLUTION +/–[a] | CH+/– | CH+/– | CH+/– |

a. Controls for BD.

| Button(s) | LD | CD/CD-R/SACD | MD/DAT | TAPE |
|---|---|---|---|---|
| ⏻ **SOURCE** | POWER ON/OFF | POWER ON/OFF | POWER ON/OFF | POWER ON/OFF |
| Number buttons | *numerics* | *numerics* | *numerics* | - |
| • *(dot)* | +10 | >10/CLEAR | CLEAR[b] | CLEAR |
| **ENTER** (CLASS) | ENTER | DISK/ENTER | OPEN/CLOSE[b] | ENTER |
| ✕ | TOP MENU | - | - | MS← |
| 🔧 | - | LEGATO LINK[a] | - | MS→ |
| ↑/↓/←/→ | ↑/↓/←/→ | - | - | II/■/◄◄/►► |
| **ENTER** | ENTER | - | - | - |
| 🏠 | - | SACD SETUP[a] | - | - |
| ↩ | RETURN | - | - | - |
| ► | ► | ► | ► | ► |
| II | II | II | II | II |
| ■ | ■ | ■ | ■ | ■ |
| ◄◄ | ◄◄ | ◄◄ | ◄◄ | ◄◄ |
| ►► | ►► | ►► | ►► | ►► |
| I◄◄ | I◄◄ | I◄◄ | I◄◄ | I◄◄ |
| ►►I | ►►I | ►►I | ►►I | ►►I |
| **AUDIO** | AUDIO | PURE AUDIO[a] | - | - |
| **DISP** | DISPLAY/INFO | TIME[a] | - | - |

a. Controls for SACD.
b. Controls for MD.

| Button(s) | TV (Projector) |
|---|---|
| ⏻ **SOURCE** | POWER ON |
| **1** | MOVIE |
| **2** | STANDARD |
| **3** | DYNAMIC |
| **4** | USER1 |
| **5** | USER2 |
| **6** | USER3 |
| **7** | COLOR+ |
| **8** | SHARP+ |
| **9** | GAMMA |
| **0** | COLOR– |
| • *(dot)* | SHARP– |
| **ENTER** (CLASS) | COLOR TEMP |
| ✕ | EXIT |
| 🔧 | INFO |
| ↑/↓/←/→ | ↑/↓/←/→ |
| **ENTER** | ENTER |
| 🏠 | TEST |
| ↩ | HIDE |
| ⤮ | MENU |
| ◄◄ | HDMI1 |
| ► | HDMI2 |
| ►► | COMP. |
| I◄◄ | VIDEO |
| II | S-VIDEO |
| ■ | BRIGHT– |
| ►►I | BRIGHT+ |
| **AUDIO** | POWER OFF |
| **DISP** | ASPECT |
| **CH +/–** | CONTRAST+/– |

# Chapter 10:
# The Advanced MCACC menu

## Making receiver settings from the Advanced MCACC menu

The Advanced MCACC (Multi Channel ACoustic Calibration) system was developed in Pioneer's laboratories with the aim of making it possible for home users to perform adjustments of the same level as in a studio easily and with high precision. The acoustic characteristics of the listening environment are measured and the frequency response is calibrated accordingly to allow high precision, automatic analysis and optimal calibration of the sound field to bring it closer to a studio environment than ever before. Furthermore, while it was previously difficult to eliminate standing waves, this receiver is equipped with a standing wave control function using a unique process to perform acoustic analysis and reduce their influence.

This section describes how to calibrate the sound field automatically and fine-adjust the sound field data manually.

**1 Switch on the receiver and your TV.**
Make sure that the TV's video input is set to this receiver.

**2 Press RECEIVER on the remote control, then press HOME MENU.**
A Graphical User Interface (GUI) screen appears on your TV. Use ⬆/⬇/⬅/➡ and **ENTER** to navigate through the screens and select menu items. Press **RETURN** to confirm and exit the current menu.

- Press **HOME MENU** at any time to exit the **Home Menu**.

**3 Select 'Advanced MCACC' from the Home Menu, then press ENTER.**

**4 Select the setting you want to adjust.**

- **Full Auto MCACC** – See *Automatically conducting optimum sound tuning (Auto MCACC)* on page 37 for a quick and effective automatic surround setup.
- **Auto MCACC** – See *Automatic MCACC (Expert)* below for a more detailed MCACC setup.
- **Manual MCACC** – Fine-tunes your speaker settings and customizes the Acoustic Calibration EQ (see *Manual MCACC setup* on page 75).
- **Demo** – No settings are saved and no errors occur. When the speakers are connected to this receiver, the test tone is output repeatedly. Press **RETURN** to cancel the test tone.

## Automatic MCACC (Expert)

If your setup requires more detailed settings than those provided in *Automatically conducting optimum sound tuning (Auto MCACC)* on page 37, you can customize your setup options below. You can calibrate your system differently for up to six different MCACC presets, which are useful if you have different listening positions depending on the type of source (for example, watching movies from a sofa, or playing a video game close to the TV).

**Important**

- Make sure the microphone/speakers are not moved during the Auto MCACC Setup.
- The screen saver will automatically appear after five minutes of inactivity.

**CAUTION**

- The test tones used in the Auto MCACC Setup are output at high volume.

**THX®**

THX is a trademark of THX Ltd., which may be registered in some jurisdictions. All rights reserved.

**1 Select 'Auto MCACC' from the Advanced MCACC menu, then press ENTER.**
If the **Advanced MCACC** screen is not displayed, refer to *Making receiver settings from the Advanced MCACC menu* above.

**2 Select the parameters you want to set.**
Use ↑/↓ to select the item, then use ←/→ to set.

- **Auto MCACC** – The default is **ALL** (recommended), but you can limit the system calibration to only one setting (to save time) if you want.[1]
- **EQ Type** *(only available when the* **Auto MCACC** *Menu above is* **EQ Pro & S-Wave***)* – This determines how the frequency balance is adjusted.

After a single calibration is performed, each of the following three correction curves can be stored separately in the MCACC memory. **SYMMETRY** implements symmetric correction for each pair of left and right speakers to flatten the frequency-amplitude characteristics. **ALL CH ADJ** is a 'flat' setting where all the speakers are set individually so no special weighting is given to any one channel. **FRONT ALIGN**[2] sets all speakers in accordance with the front speaker settings (no equalization is applied to the front left and right channels).

- **THX Speaker** *(only available when the* **Auto MCACC** *Menu above is* **ALL** *or* **Speaker Setting***)* – Select **YES** if you are using THX speakers (set all speakers to **SMALL**), otherwise leave it set to **NO**.
- **STAND.WAVE Multi-Point** *(only available when the* **Auto MCACC** *Menu above is* **EQ Pro & S-Wave***)* – In addition to measurements at the listening position, you can use two more reference points for which test tones will be analyzed for standing waves. This is useful if you want to get a balanced 'flat' calibration for several seating positions in your listening area. Place the microphone at the reference point indicated on-screen and note that *the last microphone placement will be at your main listening position:*

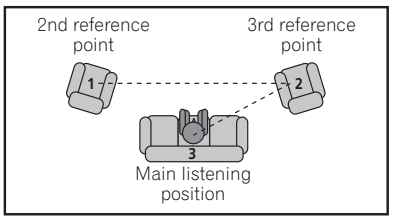


**3 Connect the microphone to the MCACC SETUP MIC jack on the front panel.**
Make sure there are no obstacles between the speakers and the microphone.

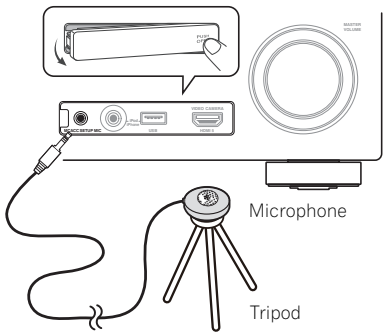


If you have a tripod, use it to place the microphone so that it's about ear level at your normal listening position. If you do not have a tripod, use some other object to install the microphone.[3]

**4 When you're finished setting the options, select START then press ENTER.**

**5 Follow the instructions on-screen.**

**6 Wait for the Auto MCACC Setup to finish outputting test tones.**
A progress report is displayed on-screen while the receiver outputs test tones to determine the speakers present in your setup. Try to be as quiet as possible while it's doing this.[4]

- With error messages (such as **Too much ambient noise!** or **Check microphone**) select **RETRY** after checking for ambient noise (see *Problems when using the Auto MCACC Setup* on page 39) and verifying the mic connection. If there doesn't seem to be a problem, you can simply select **GO NEXT** and continue.

**7 If necessary, confirm the speaker configuration in the GUI screen.**
The configuration shown on-screen should reflect the actual speakers you have.

**Note**

1 • When data measurement is taken (after selecting **ALL** or **Keep SP System**), the reverb characteristics data (both before- and after-calibration) that this receiver had been storing will be overwritten. If you want to save the reverb characteristics data before measuring, connect a USB memory device to this receiver and transfer the data.
• When measurement is taken of data other than **SYMMETRY** (after selecting **ALL** or **Keep SP System**), the data are not measured after the correction. If you will need to measure after correction data, take the measurement using the EQ Professional menu in the Manual MCACC setup (page 75).
• The **EQ Pro & S-Wave** measurement is also taken when **Keep SP System** or **EQ Pro & S-Wave** is selected. See *Acoustic Calibration EQ Professional* on page 77 for more on this.
• Either effect of Acoustic Calibration EQ Professional and Standing Wave can be switched on and off in the respective MCACC preset. For details, see *Setting the Audio options* on page 59.

2 If you selected **ALL** or **Keep SP System** as your **Auto MCACC** menu, you can specify the MCACC preset where you want to save the **SYMMETRY**, **ALL CH ADJ** and **FRONT ALIGN** settings.

3 It may not be possible to measure correctly if the microphone is placed on a table, sofa, etc.

4 Do not adjust the volume during the test tones. This may result in incorrect speaker settings.

If no operations are performed for 10 seconds while the speaker configuration check screen is being displayed, the Auto MCACC Setup will resume automatically. In this case, you don't need to select '**OK**' and press **ENTER** in step 8.

- If you see an **ERR** message (or the speaker configuration displayed isn't correct), there may be a problem with the speaker connection.
  If selecting **RETRY** doesn't work, turn off the power and check the speaker connections. If there doesn't seem to be a problem, you can simply use ↑/↓ to select the speaker and ←/→ to change the setting and continue.
- If **Reverse Phase** is displayed, the speaker's wiring (+ and –) may be inverted. Check the speaker connections.[1]
  – If the connections were wrong, turn off the power, disconnect the power cord, then reconnect properly. After this, perform the Full Auto MCACC procedure again.
  – If the connections were right, select **GO NEXT** and continue.

**8 Make sure 'OK' is selected, then press ENTER.**
A progress report is displayed on-screen while the receiver outputs more test tones to determine the optimum receiver settings.

Again, try to be as quiet as possible while this is happening. It may take 3 to 7 minutes.

- If you selected a **STAND.WAVE Multi-Point** setup (in step 2), you will be asked to place the mic at the 2nd and 3rd reference points before finally placing it at your main listening position.

**9 The Auto MCACC Setup procedure is completed and the Advanced MCACC menu reappears automatically.**
The settings made in the Auto MCACC Setup should give you excellent surround sound from your system, but it is also possible to adjust these settings manually using the **Manual MCACC** setup menu (starting below) or **Manual SP Setup** menu (starting on page 82).[2]

You can also choose to view the settings by selecting individual parameters from the **MCACC Data Check** screen (see *Checking MCACC Data* on page 79).

Press **RETURN** after you have finished checking each screen. When you're finished, select **RETURN** to go back to the **Home Menu**.

Be sure to disconnect the microphone from this receiver upon completion of the Auto MCACC Setup.

## Manual MCACC setup

You can use the settings in the **Manual MCACC** setup menu to make detailed adjustments when you're more familiar with the system. Before making these settings, you should have already completed *Automatically conducting optimum sound tuning (Auto MCACC)* on page 37.

You only need to make these settings once (unless you change the placement of your current speaker system or add new speakers).

**CAUTION**

- The test tones used in the **Manual MCACC** setup are output at high volume.

**Important**

- Press the **MCACC** button while the pertinent setup screens are displayed to select MCACC presets.
- For some of the settings below, you'll have to connect the setup microphone to the front panel and place it about ear level at your normal listening position. Press **HOME MENU** to display the **Home Menu** before you connect the microphone to this receiver.
- See *Problems when using the Auto MCACC Setup* on page 39 for notes regarding high background noise levels and other possible interference.
- If you're using a subwoofer, switch it on and turn up the volume to the middle position.

**1 Select 'Manual MCACC' from the Advanced MCACC menu.**
See *Making receiver settings from the Advanced MCACC menu* on page 73 if you're not already at this screen.

**2 Select the setting you want to adjust.**
If you're doing this for the first time, you might want to make these settings in order.

- **Fine Channel Level** – Make fine adjustments to the overall balance of your speaker system (see *Fine Channel Level* on page 76).
- **Fine SP Distance** – Make precise delay settings for your speaker system (see *Fine Speaker Distance* on page 76).

**Note**

1 If the speaker is not pointed to the microphone (listening position) or when using speakers that affect the phase (dipole speakers, reflective speakers, etc.), **Reverse Phase** may be displayed even if the speakers are properly connected.

2 • Depending on the characteristics of your room, sometimes identical speakers with cone sizes of around 12 cm (5 inches) will end up with different size settings. You can correct the setting manually using the *Manual speaker setup* on page 82.
• The subwoofer distance setting may be farther than the actual distance from the listening position. This setting should be accurate (taking delay and room characteristics into account) and generally does not need to be changed.
• If Auto MCACC Setup measurement results are incorrect due to the interaction of the speakers and viewing environment, we recommend adjusting the settings manually.

- **Standing Wave** – Control overly resonant low frequencies in your listening room (see *Standing Wave* on page 76).

The last two settings are specifically for customizing the parameters explained in *Acoustic Calibration EQ Adjust* on page 77:

- **EQ Adjust** – Manually adjust the frequency balance of your speaker system while listening to test tones (see *Acoustic Calibration EQ Adjust* on page 77).
- **EQ Professional** – Calibrate your system based on the direct sound coming from the speakers and make detailed settings according to your room's reverb characteristics (see *Acoustic Calibration EQ Professional* on page 77).

## Fine Channel Level

- Default setting: **0.0dB** (all channels)

You can achieve better surround sound by properly adjusting the overall balance of your speaker system. You can adjust the Channel Level of each speaker in 0.5 dB increments. The following setting can help you make detailed adjustments that you may not achieve using the *Manual speaker setup* on page 82.

**1 Select 'Fine Channel Level' from the Manual MCACC setup menu.**
The volume increases to the 0.0 dB reference level.

**2 Adjust the level of the left channel.**
This will be the reference speaker level, so you may want to keep the level around **0.0dB** so that you'll have plenty of room to adjust the other speaker levels.

- After pressing **ENTER**, test tones will be output.

**3 Select each channel in turn and adjust the levels (+/–12.0 dB) as necessary.**
Use ←/→ to adjust the volume of the speaker you selected to match the reference speaker. When it sounds like both tones are the same volume, press ↓ to confirm and continue to the next channel.

- For comparison purposes, the reference speaker will change depending on which speaker you select.
- If you want to go back and adjust a channel, simply use ↑/↓ to select it.

**4 When you're finished, press RETURN.**
You will return to the **Manual MCACC** setup menu.

## Fine Speaker Distance

- Default setting: **10'00"** (all speakers)

For proper sound depth and separation with your system, it is necessary to add a slight bit of delay to some speakers so that all sounds will arrive at the listening position at the same time. You can adjust the distance of each speaker in half inch increments. The following setting can help you make detailed adjustments that you may not achieve using the *Manual speaker setup* on page 82.

**1 Select 'Fine SP Distance' from the Manual MCACC setup menu.**

**2 Adjust the distance of the left channel from the listening position.**

**3 Select each channel in turn and adjust the distance as necessary.**
Use ←/→ to adjust the delay of the speaker you selected to match the reference speaker.

Listen to the reference speaker and use it to measure the target channel. From the listening position, face the two speakers with your arms outstretched pointing at each speaker. Try to make the two tones sound as if they are arriving simultaneously at a position slightly in front of you and between your arm span.[1]

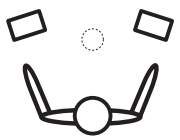

When it sounds like the delay settings are matched up, press ↓ to confirm and continue to the next channel.

- For comparison purposes, the reference speaker will change depending on which speaker you select.
- If you want to go back and adjust a channel, simply use ↑/↓ to select it.

**4 When you're finished, press RETURN.**
You will return to the **Manual MCACC** setup menu.

## Standing Wave

- Default setting: **ON**[2]**/ATT 0.0dB** (all filters)

Acoustic standing waves occur when, under certain conditions, sound waves from your speaker system resonate mutually with sound waves reflected off the walls in your listening area. This can have a negative effect on the overall sound, especially at certain lower frequencies. Depending on speaker placement, your listening position, and ultimately the shape of your room,

**Note**

1 • If you can't seem to achieve this by adjusting the distance setting, you may need to change the angle of your speakers very slightly.
• For better audibility, the subwoofer emits a continuous test tone (oscillating pulses are heard from your other speakers). Note that it may be difficult to compare this tone with the other speakers in your setup (depending on the low frequency response of the reference speaker).

2 You can switch on or off the Standing Wave and Acoustic Calibration EQ feature in the **AUDIO PARAMETER** menu. See *Setting the Audio options* on page 59 for more on this.

it results in an overly resonant ('boomy') sound. The Standing Wave Control uses filters to reduce the effect of overly resonant sounds in your listening area. During playback of a source, you can customize the filters used for Standing Wave Control for each of your MCACC presets.[1]

**1 Select 'Standing Wave' from the Manual MCACC setup menu.**

**2 Adjust the parameters for the Standing Wave Control.**

- **Filter Channel** – Select the channel to which you will apply the filter(s): **MAIN** (all except center channel and subwoofer), **Center** or **SW** (subwoofer).
- **TRIM** *(only available when the filter channel above is* **SW***)* – Adjust the subwoofer channel level (to compensate for the difference in output post-filter).
- **Freq** / **Q** / **ATT** – These are the filter parameters where **Freq** represents the frequency you will be targeting and **Q** is the bandwidth (the higher the Q, the narrower the bandwidth, or range) of the attenuation (**ATT**, the amount of reduction to the targeted frequency).

**3 When you're finished, press RETURN.**
You will return to the **Manual MCACC** setup menu.

## Acoustic Calibration EQ Adjust

- Default setting: **ON**/**0.0dB** (all channels/bands)

Acoustic Calibration Equalization is a kind of room equalizer for your speakers (excluding the subwoofer). It works by measuring the acoustic characteristics of your room and neutralizing the ambient characteristics that can color the original source material (providing a 'flat' equalization setting). If you're not satisfied with the adjustment provided in *Automatically conducting optimum sound tuning (Auto MCACC)* on page 37 or *Automatic MCACC (Expert)* on page 73, you can also adjust these settings manually to get a frequency balance that suits your tastes.

**1 Select 'EQ Adjust' from the Manual MCACC setup menu.**

**2 Select the channel(s) you want and adjust to your liking.**
Use ⬆/⬇ to select the channel.

Use ⬅/➡ to select the frequency and ⬆/⬇ to boost or cut the EQ. When you're finished, go back to the top of the screen and press ⬅ to return to **Ch**, then use ⬆/⬇ to select the channel.

- The **OVER!** indicator shows in the display if the frequency adjustment is too drastic and might distort. If this happens, bring the level down until **OVER!** disappears from the display.

**Tip**

- Changing the frequency curve of one channel too drastically will affect the overall balance. If the speaker balance seems uneven, you can raise or lower channel levels using test tones with the **TRIM** feature. Use ⬆/⬇ to select **TRIM**, then use ⬅/➡ to raise or lower the channel level for the current speaker.

**3 When you're finished, press RETURN.**
You will return to the **Manual MCACC** setup menu.

## Acoustic Calibration EQ Professional

This setup minimizes the unwanted effects of room reverberation by allowing you to calibrate your system based on the direct sound coming from the speakers.

### How to use Acoustic Calibration EQ Professional

If you find that lower frequencies seem overly reverberant in your listening room (i.e. it sounds 'boomy'), or that different channels seem to exhibit different reverb characteristics (when Type A or Type B shown on the diagrams on the following applies), select **EQ Pro. & S-Wave** (or **ALL**) for the **Auto MCACC** setting in *Automatic MCACC (Expert)* on page 73 to calibrate the room automatically.

- **Type A: Reverberance of high vs. low frequencies**

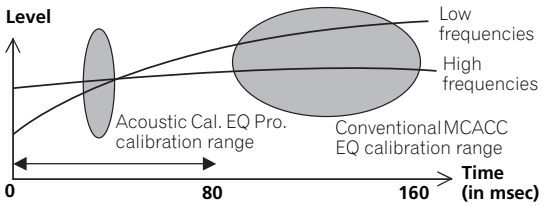


- **Type B: Reverb characteristics for different channels**

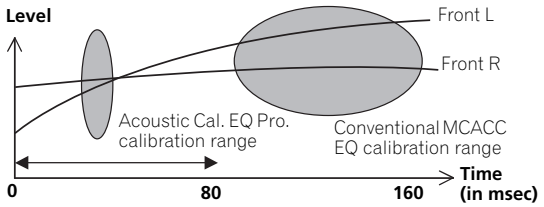


If the pattern is as shown above, select the **30-50ms** setting. If not, this setting is not necessary.

**Note**
1 Standing Wave control filter settings cannot be changed during playback of sources using the HDMI connection.

### Using Acoustic Calibration EQ Professional

**1 Select 'EQ Professional', then press ENTER.**

**2 Select an option and press ENTER.**

- **Reverb Measurement** – Use this to measure the reverb characteristics before and after calibration.
- **Reverb View** – You can check the reverb measurements made for specified frequency ranges in each channel.[1]
- **Advanced EQ Setup** – Use this to select the time period that will be used for frequency adjustment and calibration, based on the reverb measurement of your listening area. Note that customizing system calibration using this setup will alter the settings you made in *Automatically conducting optimum sound tuning (Auto MCACC)* on page 37 or *Automatic MCACC (Expert)* on page 73 and is not necessary if you're satisfied with these settings.

**3 If you selected 'Reverb Measurement', select EQ ON or OFF, and then START.**

The following options determine how the reverb characteristics of your listening area are displayed in **Reverb View**:

- **EQ OFF** – You will see the reverb characteristics of your listening area *without* the equalization performed by this receiver (before calibration).
- **EQ ON** – You will see the reverb characteristics of your listening area *with* the equalization performed by this receiver (after calibration).[2] Note that the EQ response may not appear entirely flat due to adjustments necessary for your listening area.[3]

When the reverb measurement is finished, you can select **Reverb View** to see the results on-screen. See *Professional Calibration EQ graphical output* on page 93 for troubleshooting information.

**4 If you selected 'Reverb View', you can check the reverb characteristics for each channel. Press RETURN when you're done.**

The reverb characteristics are displayed when the **Full Auto MCACC** or **Reverb Measurement** measurements are conducted.[4]

Use ←/→ to select the channel, frequency and calibration setting you want to check. Use ↑/↓ to go back and forth between the three. The reverb characteristics graph before and after EQ calibration can be displayed by selecting **Calibration : Before** / **After**. Note that the markers on the vertical axis indicate decibels in 2 dB steps.

**5 If 'Advanced EQ Setup' is selected, select the MCACC memory to be stored, then enter the desired time setting for calibration, and then select START.[5]**

Based on the reverb measurement above, you can choose the time period that will be used for the final frequency adjustment and calibration. Even though you can make this setting without reverb measurement, it is best to use the measurement results as a reference for your time setting. For an optimal system calibration based on the direct sound coming from the speakers, we recommend using the **30-50ms** setting.

Use ←/→ to select the setting. Use ↑/↓ to switch between them.

Select the setting from the following time periods (in milliseconds): **0-20ms**, **10-30ms**, **20-40ms**, **30-50ms**, **40-60ms**, **50-70ms** and **60-80ms**. This setting will be applied to all channels during calibration.

When you're finished, select **START**. It will take about 2 to 4 minutes for the calibration to finish.

After the Acoustic Calibration Equalization is set, you are given the option to check the settings on-screen.

**Note**

1 If the **Reverb View** procedure is performed after the *Automatically conducting optimum sound tuning (Auto MCACC)* on page 37 or **Reverb Measurement** operation, depending on the standing wave control setting, differences may appear on the reverb graph. With the Auto MCACC function, the reverberations are measured with the standing waves controlled, so the reverb characteristics graph shows the characteristics with the effect of the standing waves eliminated. By contrast, the **Reverb Measurement** function measures the reverberations without controlling the standing waves, so the graph indicates the reverb characteristics including the effect of the standing waves. If you wish to check the reverb characteristics of the room itself (with the standing waves as such), we recommend using the **Reverb Measurement** function.

2 • The calibration corresponding to the currently selected MCACC preset will be used when **EQ ON** is selected. To use another MCACC preset, press **MCACC** to select the MCACC memory you want to store.
• The predicted reverb characteristics after calibration can be acquired with the **Full Auto MCACC** function (*Automatically conducting optimum sound tuning (Auto MCACC)* on page 37), but here the actually measured reverb characteristics after calibration can be acquired.

3 After auto calibration with **EQ Type : SYMMETRY** (**Full Auto MCACC**, etc.), the graph for the inferred reverb characteristics can be displayed by selecting **Reverb View**. To display the actually measured reverb characteristics after EQ calibration, measure with **EQ ON**.

4 The **After** display when measurements have been made using the **Full Auto MCACC** or **Auto MCACC** (**ALL** or **KEEP SP system**) function shows the graph for the inferred reverb characteristics after **EQ Type : SYMMETRY** calibration.

5 To specify the place where the MCACC memory is to be stored, press **MCACC** to select the MCACC memory you want to store.

## Checking MCACC Data

At the procedure of *Automatically conducting optimum sound tuning (Auto MCACC)* on page 37, the procedure of *Automatic MCACC (Expert)* on page 73 or after fine-adjusting at *Manual MCACC setup* on page 75, you can check your calibrated settings using the GUI screen. The data can be transferred to a computer using a USB device to check it on the computer's screen as well.

**1 Press RECEIVER, then press HOME MENU.**
A Graphical User Interface (GUI) screen appears on your TV. Use ↑/↓/←/→ and **ENTER** to navigate through the screens and select menu items. Press **RETURN** to confirm and exit the current menu.

**2 Select 'MCACC Data Check' from the Home Menu.**

**3 Select the setting you want to check.**

- **Speaker Setting** – Used to check the settings of the speaker systems. See *Speaker Setting* below for more on this.
- **Channel Level** – Used to check the output level of the different speakers. See *Channel Level* below for more on this.
- **Speaker Distance** – Used to check the distance to the different speakers. See *Speaker Distance* below for more on this.
- **Standing Wave** – Used to check the standing wave control filter settings. See *Standing Wave* below for more on this.
- **Acoustic Cal EQ** – Used to check the calibration values of the listening environment's frequency response. See *Acoustic Cal EQ* below for more on this.
- **Output MCACC data** – See *Output MCACC data* on page 80 for more on this.

**4 Press RETURN to go back to the MCACC Data Check menu, repeating steps 2 and 3 to check other settings.**

**5 When you're finished, press RETURN.**
You will return to the **Home Menu**.

### Speaker Setting

Use this to display the speaker size and number of speakers. See *Speaker Setting* on page 83 for more on this.

**1 Select 'Speaker Setting' from the MCACC Data Check menu.**

**2 Select the channel you want to check.**
Use ↑/↓ to select the channel. The corresponding channel on the layout diagram is highlighted.

### Channel Level

Use this to display the level of the various channels. See *Channel Level* on page 84 for more on this.

**1 Select 'Channel Level' from the MCACC Data Check menu.**

**2 When 'MCACC' is highlighted, use ←/→ to select the MCACC preset you want to check.**
The level of the various channels set at the selected MCACC preset is displayed. '**---**' is displayed for channels that are not connected.

### Speaker Distance

Use this to display the distance from the different channels to the listening position. See *Speaker Distance* on page 84 for more on this.

**1 Select 'Speaker Distance' from the MCACC Data Check menu.**

**2 When 'MCACC' is highlighted, use ←/→ to select the MCACC preset you want to check.**
The distance from the various channels set at the selected MCACC preset is displayed. '**---**' is displayed for channels that are not connected.

### Standing Wave

Use this to display the standing wave related adjustment values for the various MCACC memories. See *Standing Wave* on page 76 for more on this.

**1 Select 'Standing Wave' from the MCACC Data Check menu.**

**2 When 'Filter Channel' is highlighted, use ↑/↓ to select the channel for which you want to check standing wave control.**
The standing wave related calibration value for the selected channel stored at the selected MCACC preset and its graph are displayed.

**3 Press ← to highlight 'MCACC', then use ↑/↓ to select the MCACC preset you want to check.**

### Acoustic Cal EQ

Use this to display the calibration values for the frequency response of the various channels set in the different MCACC presets. See *Acoustic Calibration EQ Adjust* on page 77 for more on this.

**1 Select 'Acoustic Cal EQ' from the MCACC Data Check menu.**

**2 When 'Ch' is highlighted, use ↑/↓ to select the channel.**
The calibration value for the frequency response of the selected channel stored at the selected MCACC preset and its graph are displayed.

**3 Press ← to highlight 'MCACC', then use ↑/↓ to select the MCACC preset you want to check.**

### Output MCACC data

Before continuing, make sure you have completed step 2 in *Checking MCACC Data* on page 79. The data measured with the Advanced MCACC function is transmitted to the USB device.[1] The 3D graphs of the reverb characteristics before and after calibration and the MCACC results (parameters) can be checked on your computer.

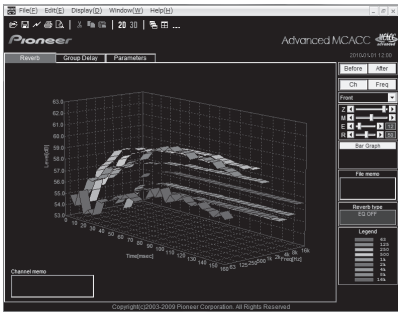


**1 Select 'Output MCACC data' from the MCACC Data Check menu.**

When the receiver is ready for transmission, **"Please connect your USB memory for the MCACC data, then press OK to output them."** shows on the GUI screen.

**2 Connect your USB device to the USB terminal on the front panel, then select "OK".**

**"Please wait..."** will be displayed on the screen and transmission of measurement data to the USB device will begin.

Transmission is complete when **"Complete"** is displayed.[2]

## Data Management

This system allows you to store up to six MCACC presets, allowing you to calibrate your system for different listening positions (or frequency adjustments for the same listening position).[3] This is useful for alternate settings to match the kind of source you're listening to and where you're sitting (for example, watching movies from a sofa, or playing a video game close to the TV).

From this menu you can copy from one preset to another, name presets for easier identification and clear any ones you don't need.

**1 Press RECEIVER, then press HOME MENU.**

A Graphical User Interface (GUI) screen appears on your TV. Use ↑/↓/←/→ and **ENTER** to navigate through the screens and select menu items. Press **RETURN** to confirm and exit the current menu.

**2 Select 'Data Management' from the Home Menu.**

**3 Select the setting you want to adjust.**

- **Memory Rename** – Name your MCACC presets for easy identification (see *Renaming MCACC presets* below).
- **MCACC Memory Copy** – Copy settings from one MCACC preset to another (see *Copying MCACC preset data* on page 81).
- **MCACC Memory Clear** – Clear any MCACC presets that you don't want (see *Clearing MCACC presets* on page 81).

### Renaming MCACC presets

If you have several different MCACC presets that you're using, you may want to rename them for easier identification.

**1 Select 'Memory Rename' from the Data Management setup menu.**

**2 Select the MCACC preset you want to rename, then select an appropriate preset name.**

Use ↑/↓ to select the preset, then ←/→ to select a preset name.

**3 Repeat for as many MCACC presets as necessary, then press RETURN when you're finished.**

You will return to the **Data Management** setup menu.

**Note**

1 MCACC data and parameters are transferred from this receiver to a USB device and by connecting the USB device to a computer, the data is imported via the MCACC software in the computer. See *Connecting a USB device for Advanced MCACC output* on page 34 for more on this.

2 Only one set of reverb characteristics is stored on the receiver. If you wish to compare several different measurement results, transmit the data to the USB memory each time reverb measurements are taken.

3 This can be done in *Automatically conducting optimum sound tuning (Auto MCACC)* on page 37 or *Automatic MCACC (Expert)* on page 73, either of which you should have already completed.

## Copying MCACC preset data

If you want to manually adjust the Acoustic Calibration EQ (see *Manual MCACC setup* on page 75), we recommend copying your current settings[1] to an unused MCACC preset. Instead of just a flat EQ curve, this will give you a reference point from which to start.

**1 Select 'MCACC Memory Copy' from the Data Management setup menu.**

**2 Select the setting you want to copy.**

- **All Data** – Copies all the settings of the selected MCACC preset memory.
- **Level & Distance** – Copies only the channel level and speaker distance settings of the selected MCACC preset memory.

**3 Select the MCACC preset you'll be copying the settings 'From', then specify where you want to copy them ('To').**

Make sure you don't overwrite an MCACC preset you're currently using (this can't be undone).

**4 Select 'OK' to confirm and copy the settings.**

When **MCACC Memory Copy?** is displayed, select **YES**. If **NO** is selected, the memory is not copied.

**Completed!** shows in the GUI screen to confirm the MCACC preset has been copied, then you automatically return to the **Data Management** setup menu.

## Clearing MCACC presets

If you are no longer using one of the MCACC presets stored in memory, you can choose to clear the calibration settings of that preset.

**1 Select 'MCACC Memory Clear' from the Data Management setup menu.**

**2 Select the MCACC preset you want to clear.**

Make sure you don't clear an MCACC preset you're currently using (this can't be undone).

**3 Select 'OK' to confirm and clear the preset.**

When **MCACC Memory Clear?** is displayed, select **YES**. If **NO** is selected, the memory is not cleared.

**Completed!** shows in the GUI screen to confirm the MCACC preset has been cleared, then you automatically return to the **Data Management** setup menu.

**Note**

1 The settings made in *Automatically conducting optimum sound tuning (Auto MCACC)* on page 37 or *Automatic MCACC (Expert)* on page 73.

# Chapter 11: The System Setup and Other Setup menus

## Making receiver settings from the System Setup menu

The following section describes how to change the speaker-related settings manually and make various other settings (input selection, OSD language selection, etc.).

**1 Switch on the receiver and your TV.**
Make sure that the TV's video input is set to this receiver.

**2 Press RECEIVER, then press HOME MENU.**
A Graphical User Interface (GUI) screen appears on your TV. Use ↑/↓/←/→ and **ENTER** to navigate through the screens and select menu items. Press **RETURN** to confirm and exit the current menu.

- Press **HOME MENU** at any time to exit the **Home Menu**.

**3 Select 'System Setup' from the Home Menu, then press ENTER.**

**4 Select the setting you want to adjust.**

- **Manual SP Setup** – Sets the type of connection used for surround back terminals and the size, number distance and overall balance of the connected speakers (see *Manual speaker setup* below).
- **Input Setup** – Specifies what you've connected to the digital, HDMI and component video inputs (see *The Input Setup menu* on page 39).
- **OSD Language** – The GUI screen's display language can be changed (see *Changing the OSD display language (OSD Language)* on page 37).
- **Network Setup** – Conducts the setup necessary to connect this unit to the network (see *Network Setup menu* on page 85).
- **Other Setup** – Makes customized settings to reflect how you are using the receiver (see *The Other Setup menu* on page 86).

## Manual speaker setup

This receiver allows you to make detailed settings to optimize the surround sound performance. You only need to make these settings once (unless you change the placement of your current speaker system or add new speakers).

These settings are designed to customize your system, but if you're satisfied with the settings made in *Automatically conducting optimum sound tuning (Auto MCACC)* on page 37, it isn't necessary to make all of these settings.

**⚠ CAUTION**

- The test tones used in the **Manual SP Setup** are output at high volume.

**1 Select 'Manual SP Setup', then press ENTER.**
See *Making receiver settings from the System Setup menu* above if you're not already at this screen.

**2 Select the setting you want to adjust.**
If you are doing this for the first time, you may want to adjust these settings in order:

- **Speaker System** – Specifies how you are using your surround back speakers (page 83).
- **Speaker Setting** – Specifies the size and number of speakers you've connected (page 83).
- **Channel Level** – Adjusts the overall balance of your speaker system (page 84).
- **Speaker Distance** – Specifies the distance of your speakers from the listening position (page 84).
- **X-Curve** – Adjusts the tonal balance of your speaker system for movie soundtracks (page 85).
- **THX Audio Setting** – Specifies whether you are using a THX speaker setup (page 85).

**3 Make the adjustments necessary for each setting, pressing RETURN to confirm after each screen.**

## Speaker system setting

- Default setting: **Normal(SB/FH)**

There are several ways you can use the speaker terminals with this receiver. In addition to a normal home theater setup where they are used for the front height speakers or front wide speakers, they can be used for bi-amping the front speakers or as an independent speaker system in another room.

**1 Select 'Speaker System' from the Manual SP Setup menu.**

See *Making receiver settings from the System Setup menu* on page 82 if you're not already at this screen.

**2 Select the speaker system setting.**

- **Normal(SB/FH)** – Select for normal home theater use with front height speakers in your main (speaker system A) setup.
- **Normal(SB/FW)** – Select for normal home theater use with front wide speakers in your main (speaker system A) setup.
- **Speaker B** – Select to use the B speaker terminals to listen to stereo playback in another room (see *Switching the speaker terminals* on page 62).
- **Front Bi-Amp** – Select this setting if you're bi-amping your front speakers (see *Bi-amping your speakers* on page 21).
- **ZONE 2** – Select to use the (surround back) B speaker terminals for an independent system in another zone (see *Using the MULTI-ZONE controls* on page 62).

**3 If you selected Normal(SB/FH), Normal(SB/FW), or Speaker B in Step 2, select the placement of the surround speakers.**

In a 7.1-channel surround system with surround speakers placed directly at the sides of the listening position, the surround sound of 5.1-channel sources is heard from the side. This function mixes the sound of the surround speakers with the surround back speakers so that the surround sound is heard from diagonally to the rear as it should be.[1]

- **ON SIDE** – Select when the surround speakers is positioned right beside you.
- **IN REAR** – Select when the surround speaker is positioned obliquely behind you.

**4 When 'Setting Change?' is displayed, select Yes.**

If **No** is selected, the setting is not changed.

You will return to the **Manual SP Setup** menu.

## Speaker Setting

Use this setting to specify your speaker configuration (size, number of speakers and crossover frequency)[2]. It is a good idea to make sure that the settings made in *Automatically conducting optimum sound tuning (Auto MCACC)* on page 37 are correct. Note that this setting applies to all MCACC presets, and cannot be set independently.

**1 Select 'Speaker Setting' from the Manual SP Setup menu.**

**2 Choose the set of speakers that you want to set, then select a speaker size.**

Use ⬅/➡ to select the size (and number) of each of the following speakers:[3]

- **Front** – Select **LARGE** if your front speakers reproduce bass frequencies effectively, or if you didn't connect a subwoofer. Select **SMALL** to send the bass frequencies to the subwoofer.
- **Center** – Select **LARGE** if your center speaker reproduces bass frequencies effectively, or select **SMALL** to send bass frequencies to the other speakers or subwoofer. If you didn't connect a center speaker, choose **NO** (the center channel is sent to the front speakers).
- **FH** – Select **LARGE** if your front height speakers reproduce bass frequencies effectively, or select **SMALL** to send bass frequencies to the other speakers or subwoofer. If you didn't connect front height speakers, choose **NO** (the front height channel is sent to the front speakers).[4]
- **FW** – Select **LARGE** if your front wide speakers reproduce bass frequencies effectively, or select **SMALL** to send bass frequencies to the other speakers or subwoofer. If you didn't connect front wide speakers, choose **NO** (the front wide channel is sent to the front speakers).[5]

**Note**

1 Depending on the positions of the speakers and the sound source, in some cases it may not be possible to achieve good results. In this case, set the setting to **ON SIDE** or **IN REAR**.

2 If you're using a THX speaker setup, set all speakers to **SMALL**.

3 If you select **SMALL** for the front speakers the subwoofer will automatically be fixed to **YES**. Also, the center, surround, surround back, front height and front wide speakers can't be set to **LARGE** if the front speakers are set to **SMALL**. In this case, all bass frequencies are sent to the subwoofer.

4 • You can adjust this setting only when **Speaker System** setting is **Normal(SB/FH)**.
• If the surround speakers are set to **NO**, this setting will automatically be set to **NO**.

5 • You can adjust this setting only when **Speaker System** setting is **Normal(SB/FW)**.
• If the surround speakers are set to **NO**, this setting will automatically be set to **NO**.

- **Surr** – Select **LARGE** if your surround speakers reproduce bass frequencies effectively. Select **SMALL** to send bass frequencies to the other speakers or subwoofer. If you didn't connect surround speakers choose **NO** (the sound of the surround channels is sent to the front speakers or a subwoofer).
- **SB** – Select the number of surround back speakers you have (one, two or none).[1] Select **LARGEx2** or **LARGEx1** if your surround back speakers reproduce bass frequencies effectively. Select **SMALLx2** or **SMALLx1** to send bass frequencies to the other speakers or subwoofer. If you didn't connect surround back speakers choose **NO**.
- **SW** – LFE signals and bass frequencies of channels set to **SMALL** are output from the subwoofer when **YES** is selected. Choose the **PLUS** setting if you want the subwoofer to output bass sound continuously or you want deeper bass (the bass frequencies that would normally come out the front and center speakers are also routed to the subwoofer).[2] If you did not connect a subwoofer choose **NO** (the bass frequencies are output from other speakers).

**3 Select 'X. OVER' and set the crossover frequency.[3]**
Frequencies below this point will be sent to the subwoofer (or **LARGE** speakers).

**4 When you're finished, press RETURN.**
You will return to the **Manual SP Setup** menu.

## Channel Level

Using the channel level settings, you can adjust the overall balance of your speaker system, an important factor when setting up a home theater system.

**1 Select 'Channel Level' from the Manual SP Setup menu.**
The test tones will start.

**2 Adjust the level of each channel using ←/→.**
Use ↑/↓ to switch speakers.

Adjust the level of each speaker as the test tone is emitted.[4]

**3 When you're finished, press RETURN.**
You will return to the **Manual SP Setup** menu.

### Tip

- You can change the channel levels by press RECEIVER, then press **CH LEVEL**, and then using ←/→ on the remote control.

## Speaker Distance

For good sound depth and separation from your system, you need to specify the distance of your speakers from the listening position. The receiver can then add the proper delay needed for effective surround sound.

**1 Select 'Speaker Distance' from the Manual SP Setup menu.**

**2 Adjust the distance of each speaker using ←/→.**
You can adjust the distance of each speaker in 1/2 inch Increments.

**3 When you're finished, press RETURN.**
You will return to the **Manual SP Setup** menu.

### Tip

- For best surround sound, make sure the surround back speakers are the same distance from the listening position.

**Note**

1 • If you selected **ZONE 2** or **Front Bi-Amp** (in *Speaker system setting* on page 83) you can't adjust the surround back settings.
• If the surround speakers are set to **NO**, the surround back speakers will automatically be set to **NO**.

2 If you have a subwoofer and like lots of bass, it may seem logical to select **LARGE** for your front speakers and **PLUS** for the subwoofer. This may not, however, yield the best bass results. Depending on the speaker placement of your room you may actually experience a decrease in the amount of bass due low frequency cancellations. In this case, try changing the position or direction of speakers. If you can't get good results, listen to the bass response with it set to **PLUS** and **YES** or the front speakers set to **LARGE** and **SMALL** alternatively and let your ears judge which sounds best. If you're having problems, the easiest option is to route all the bass sounds to the subwoofer by selecting **SMALL** for the front speakers.

3 • This setting decides the cutoff between bass sounds playing back from the speakers selected as **LARGE**, or the subwoofer, and bass sounds playing back from those selected as **SMALL**. It also decides where the cutoff will be for bass sounds in the LFE channel.
• With Full Auto MCACC Setup or Auto MCACC Setup (**ALL** or **Speaker Setting**), the setting here will not apply and the crossover frequency will be automatically set. Crossover frequency is a frequency aimed at achieving the optimal sound field taking into account the bass capacity of all connected speakers and human aural characteristics.
• If you're using THX speakers, confirm that the crossover frequency is set to **80Hz**.

4 If you are using a Sound Pressure Level (SPL) meter, take the readings from your main listening position and adjust the level of each speaker to 75 dB SPL (C-weighting/slow reading).

### X-Curve

Most soundtracks mixed for cinema sound too bright when played back in large rooms. The X-Curve setting acts as a kind of re-equalization for home theater listening, and restores proper tonal balance of movie soundtracks.[1]

**1 Select 'X-Curve' from the Manual SP Setup menu.**

**2 Choose the X-Curve setting you want.**

Use ←/→ to adjust the setting. The X-Curve is expressed as a downwards slope in decibels per octave, starting at 2 kHz. The sound becomes less bright as the slope increases (to a maximum of **–3.0dB/oct**). Use the following guidelines to set the X-Curve according to your room size:

| Room size ($ft^2$) | ≤400 | ≤550 | ≤650 | ≤800 | ≤2200 | ≤12000 |
|---|---|---|---|---|---|---|
| X-Curve (dB/oct) | –0.5 | –1.0 | –1.5 | –2.0 | –2.5 | –3.0 |

- If you select **OFF**, the frequency curve will be flat and the X-Curve has no effect.

**3 When you're finished, press RETURN.**

### THX Audio Setting

This menu allows the user to adjust various THX features including Loudness Plus, SBch processing, SB Speaker Position, THX Select2 Subwoofer (on/off), and Boundary Gain Control. Please see page 100 for details regarding these THX features.

**1 Select 'THX Audio Setting' from the Manual SP setup menu.**

**2 Select either ON or OFF for the THX Loudness Plus setting.**

**3 Specify whether the SBch processing is AUTO or MANUAL.**

- **AUTO** – When surround back speakers are connected, whether or not surround back channel signals are present in the audio signals being input is detected and the appropriate THX surround mode is set.
- **MANUAL** – The desired THX surround mode can be selected regardless of whether or not surround back channel signals are present in the audio signals being input.

**4 Specify the distance of your surround back speakers from each other.**

- **0–1 ft** – Surround back speakers within 1 foot apart.
- **>1–4 ft** – Surround back speakers between 1 and 4 feet apart.
- **4 ft<** – Surround back speakers more than 4 feet apart (default).

**5 Specify whether your subwoofer is THX Select2 certified or not.**

If your subwoofer isn't THX Select2 certified, but you still want to switch boundary gain compensation on, select **YES** here, but the effect might not work properly.

**6 Select either ON or OFF for Boundary Gain Compensation setting.**

**7 When you're finished, press RETURN.**

You will return to the **Manual SP Setup** menu.

## Network Setup menu

Setting up the network to listen to Internet radio on this receiver.

**1 Press RECEIVER on the remote control, then press HOME MENU.**

A Graphical User Interface (GUI) screen appears on your TV. Use ↑/↓/←/→ and **ENTER** to navigate through the screens and select menu items. Press **RETURN** to confirm and exit the current menu.

**2 Select 'System Setup' from the Home Menu.**

**3 Select 'Network Setup' from the System Setup menu.**

**4 Select the setting you want to adjust.**

If you are doing this for the first time, you may want to adjust these settings in order:

- **IP Address, Proxy** – Sets up the IP address/Proxy of this receiver (see below).
- **Information** – Checks the MAC address of this receiver (page 86).
- **Network Standby** – Allows the Web Control function to be used even when the receiver is in the standby mode (page 86).

### IP address/Proxy setting

In case the router connected to the LAN terminal on this receiver is a broadband router (with a built-in DHCP server function), simply turn on the DHCP server function, and you will not need to set up the network manually. You must set up the network as described below only when you have connected this receiver to a broadband router without a DHCP server function. Before you set up the network, consult with your ISP or the network manager for the required settings. It is advised that you also refer to the operation manual supplied with your network component.[2]

**Note**

1 Since the principal is the same, X-Curve isn't applied when you're using any of the Home THX or Pure direct modes.

2 In case you make changes to the network configuration without the DHCP server function, make the corresponding changes to the network settings of this receiver.

**IP Address**
The IP address to be entered must be defined within the following ranges. If the IP address defined is beyond the following ranges, you cannot listen to Internet radio stations.
Class A: 10.0.0.1 to 10.255.255.254
Class B: 172.16.0.1 to 172.31.255.254
Class C: 192.168.0.1 to 192.168.255.254

**Subnet Mask**
In case an xDSL modem or a terminal adapter is directly connected to this receiver, enter the subnet mask provided by your ISP on paper. In most cases, enter 255.255.255.0.

**Default Gateway**
In case a gateway (router) is connected to this receiver, enter the corresponding IP address.

**Primary DNS Server/Secondary DNS Server**
In case there is only one DNS server address provided by your ISP on paper, enter it in the **'Primary DNS Server'** field. In case there are more than two DNS server addresses, enter **'Secondary DNS Server'** in the other DNS server address field.

**Proxy Hostname/Proxy Port**
This setting is required when you connect this receiver to the Internet via a proxy server. Enter the IP address of your proxy server in the **'Proxy Hostname'** field. Also, enter the port number of your proxy server in the **'Proxy Port'** field.

**Tip**

- Press ↑/↓ or the numeric buttons to enter alphanumeric characters. To delete alphanumeric characters entered one at a time, press **CLEAR**.

**1 Select 'IP Address, Proxy' from the Network Setup menu.**

**2 Select the DHCP setting you want.**
When you select **ON**, the network is automatically set up, and you do not need to follow Steps 3. Proceed with Step 4.

If there is no DHCP server on the network and you select **ON**, this receiver will use its own Auto IP function to determine the IP address.[1]

**3 Enter the IP Address, Subnet Mask, Default Gateway, Primary DNS Server and Secondary DNS Server.**
Press ↑/↓ to select a number and ←/→ to move the cursor.

**4 Select 'OFF' or 'ON' for the Enable Proxy Server setting to deactivate or activate the proxy server.**
In case you select **'OFF'**, proceed with Step 7. In case you select **'ON'**, on the other hand, proceed with Step 5.

**5 Enter the address of your proxy server or the domain name.**

**6 Enter the port number of your proxy server.**
Use the numeric buttons to enter the port number.

**7 Select 'OK' to confirm the IP Address/Proxy setup.**

### Checking the MAC address

You can check the MAC address.

**1 Select 'Information' from the Network Setup menu.**

### Network Standby

This setting allows the **Web Control** function (page 64) for operating the receiver from a computer connected on the same LAN as the receiver to be used even when the receiver is in the standby mode.

**1 Select 'Network Standby' from the Network Setup menu.**

**2 Specify whether the Network Standby is ON or OFF.**

- **ON** – The Web Control function can be used even when the receiver is in the standby mode.
- **OFF** – The Web Control function cannot be used when the receiver is in the standby mode (This lets you reduce power consumption in the standby mode).

## The Other Setup menu

The **Other Setup** menu is where you can make customized settings to reflect how you are using the receiver.

**1 Press RECEIVER on the remote control, then press HOME MENU.**
A Graphical User Interface (GUI) screen appears on your TV. Use ↑/↓/←/→ and **ENTER** to navigate through the screens and select menu items. Press **RETURN** to confirm and exit the current menu.

**2 Select 'System Setup' from the Home Menu.**

**3 Select 'Other Setup', then press ENTER.**

**4 Select the setting you want to adjust.**
If you are doing this for the first time, you may want to adjust these settings in order:

**Note**

1 The IP address determined by the Auto IP function is 169.254.X.X. You cannot listen to an Internet radio station if the IP address is set for the Auto IP function.

- **HDMI Setup** – Synchronizes this receiver with your Pioneer component supporting **Control** with HDMI (page 56).
- **Volume Setup** – Sets up the volume-related operations of this receiver (see below).
- **Remote Control Mode Setup** – Sets this receiver's remote control mode (see below).
- **Flicker Reduction** – Adjusts the way the GUI screen looks (see below).
- **EXTENSION Setup** – Allows the CU-RF100 to be used even when the receiver is in the standby mode (see below).
- **Pairing Bluetooth Setup** – Use to pair a *Bluetooth* ADAPTER and *Bluetooth* wireless technology device (page 50).

**5 Make the adjustments necessary for each setting, pressing RETURN to confirm after each screen.**

## Volume Setup

You can set the maximum volume of this receiver or specify what the volume level will be when the power is turned on.

**1 Select 'Volume Setup' from the Other Setup menu.**

**2 Select the Power ON Level setting you want.**
The volume can be set so that it is always set to the same level when the receiver's power is turned on.

- **LAST** (default) – When the power is turned on, the volume is set to the same level as when the power was last turned off.
- "**---**" – When the power is turned on, the volume is set to minimum level.
- **–80.0dB** to **+12.0dB** – Specify the volume to be set when the power is turned on, in steps of 0.5 dB.

It is not possible to set a volume level greater than the value specified at Volume Limit setup (see below).

**3 Select the Volume Limit setting you want.**
Use this function to limit the maximum volume. The volume cannot be increased above the level set here, even by operating **MASTER VOLUME** button (or the dial on the front panel).

- **OFF** (default) – The maximum volume is not limited.
- **–20.0dB**/**–10.0dB**/**0.0dB** – The maximum volume is limited to the value set here.

**4 Select the Mute Level setting you want.**
This sets how much the volume is to be turned down when **MUTE** is pressed.

- **FULL** (default) – No sound.
- **–40.0dB**/**–20.0dB** – The volume will be turned down to the level specified here.

**5 When you're finished, press RETURN.**
You will return to the **Other Setup** menu.

## Remote Control Mode Setup

- Default setting: **1**

This sets this receiver's remote control mode to prevent erroneous operation when multiple units of the receiver are being used.

**1 Select 'Remote Control Mode Setup' from the Other Setup menu.**

**2 Select the Remote Control Mode setting you want.**

**3 Select "OK" to change the remote control mode.**

**4 Follow the instructions on the screen to change the remote control's setting.**
See *Operating multiple receivers* on page 66.

**5 When you're finished, press RETURN.**
You will return to the **Other Setup** menu.

## Flicker Reduction Setup

- Default setting: **OFF**

The GUI screen's resolution can be increased. If you feel the GUI screen is hard to see, try changing this setting. Note that the resolution in this setting only affects the GUI screen; it has no influence on the video output.

**1 Select 'Flicker Reduction Setup' from the Other Setup menu.**

**2 Select the Flicker Reduction setting you want.**

**3 When you're finished, press RETURN.**
You will return to the **Other Setup** menu.

## EXTENSION Setup

- Default setting: **OFF**

A separately sold the CU-RF100 can be used to operate the receiver by RF communications. To do so, set the **EXTENSION** setting to **ON**. When **ON** is set here, the receiver can be operated even when the receiver is in the standby mode.

**1 Select 'EXTENSION Setup' from the Other Setup menu.**

**2 Select the EXTENSION setting you want.**

**3 When you're finished, press RETURN.**
You will return to the **Other Setup** menu.

# Chapter 12:
# Additional information

## Speaker Setting Guide

In order to achieve an even better surround effect, it is important to accurately position the speakers and make their volume and tone characteristics uniform so as to finely focus the multi-channel sound.

The three major elements in positioning the speakers are **distance**, **angle** and **orientation** (the direction in which the speakers are pointing).

**Distance**: The distance of all the speakers should be equal.

**Angle**: The speakers should be horizontally symmetrical.

**Orientation**: The orientation should be horizontally symmetrical.

In most homes, however, it is not possible to achieve this environment. For the distance, on this receiver it is possible to automatically correct the speaker distance electrically to a precision of 1/2 inch using the Auto MCACC Setup function (page 37).

**Step 1: Speaker layout and distance adjustment**
Use speaker stands or the like to make sure the speakers are steady, and leave at least 10 cm (4 inches) from the surrounding walls. Position the speakers attentively so that the speakers on the left and right are at equal angles from the listening position (center of the adjustments). (We recommend using cords, etc., when adjusting the layout.) Ideally all the speakers should be equidistant from the listening position.

**Tip**

- If the speakers cannot be set at equal distances (on a circle), use the Auto MCACC Setup speaker distance correction and Fine Speaker Distance functions to make them equalize the distance artificially.

**Step 2: Adjusting the speaker height**
Adjust the heights (angles) of the different speakers.

Adjust so that the front speaker units reproducing mid- and high frequencies is roughly at the height of the ears.

If the center speaker cannot be set at the same height as the front speakers, adjust its angle of elevation to point it to the listening position.

Set surround speaker 1 so that it is not under the height of the ears.

**Step 3: Adjusting the speaker orientation**
If the left and right speakers are not pointing in the same direction, the tone will not be the same on the right and left, and as a result the sound field will not be reproduced properly. However, if all the speakers are pointed towards the listening position, the sound field will seem cramped. Testing by the Pioneer Multi-channel Research Group has shown that a good sense of sound positioning can be achieved by pointing all the speakers towards an area 30 cm to 80 cm (12 inches to 31 inches) behind the listening position (between the surround speakers and the listening position).

However, the sense of sound positioning can differ according to the conditions in the room and the speakers being used. In smaller environments in particular (when the front speakers are close to the listening position), with this method the speakers will be pointed too inward. We suggest you use this example of installation as reference when trying out different installation methods.

**Step 4: Positioning and adjusting the subwoofer**
Placing the subwoofer between the center and front speakers makes even music sources sound more natural (if there is only one subwoofer, it doesn't matter if it is placed on the left or right side). The low bass sound output from the subwoofer is not directional and there is no need to adjust the height. Normally the subwoofer is placed on the floor. Put it in a position at which it will not cancel out the bass sound output from the other speakers. Also note that placing it near a wall may result in sympathetic vibrations with the building that could excessively amplify the bass sound.

If the subwoofer must be installed near a wall, place it at an angle so that it is not parallel to the wall surface. This can help reduce any sympathetic vibrations, but depending on the shape of the room this could result in standing waves. However, even if standing waves are generated, their influence on the sound quality can be prevented using the Auto MCACC's standing wave control function (page 79).

**Step 5: Default settings with the Auto MCACC Setup (auto sound field correction) function**
It is more effective to perform the Auto MCACC Setup (page 37) procedure once the adjustments described above have been completed.

**Tip**

- The distance to the subwoofer may be slightly larger than the distance actually measured with a tape measure, etc. This is because this distance is corrected for electric delay, and is not a problem.

### Positional relationship between speakers and monitor

#### Position of front speakers and monitor

The front speakers should be as equidistant as possible to the monitor.

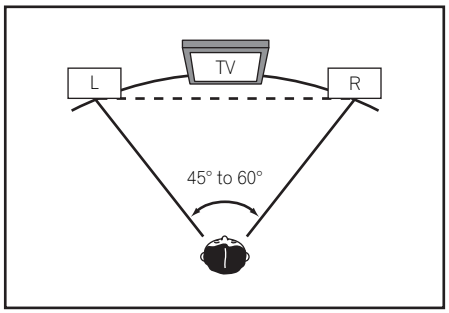


#### Position of center speaker and monitor

Since mostly dialogs are output from the center speaker, keeping the center speaker as close as possible to the screen makes the overall sound more natural. For TVs using Braun tubes, however, when installing the center speaker on the floor, adjust its angle of elevation to point it towards the listening position.

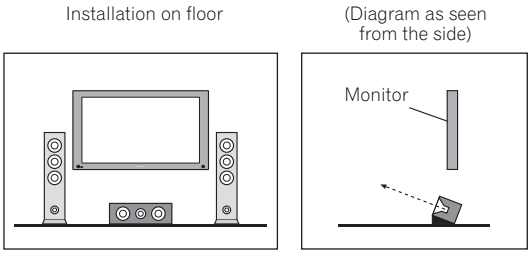


- If the center speaker is not of the shielded type, install it away from the TV.
- When installing the center speaker on top of the monitor, place it facing slightly downwards towards the listening position.

## Troubleshooting

Incorrect operations are often mistaken for trouble and malfunctions. If you think that there is something wrong with this component, check the points below. Sometimes the trouble may lie in another component. Investigate the other components and electrical appliances being used. If the trouble cannot be rectified even after exercising the checks listed below, ask your nearest Pioneer authorized independent service company to carry out repair work.

**Note**

- If the unit does not operate normally due to external effects such as static electricity disconnect the power plug from the outlet and insert again to return to normal operating conditions.

### Power

| Symptom | Remedy |
|---|---|
| The power does not turn on. | • Make sure that the power cord is plugged in to an active power outlet.<br>• Try disconnecting from the power outlet, then plugging back in. |
| Power cannot be turned off. (**ZONE 2 ON** or **ZONE 3 ON** (VSX-1325 only) is displayed.) | • Press the remote control's **ZONE 2** or **ZONE 3** (VSX-1325 only) button, then press ⏻ **RECEIVER** to switch the sub zone off. |
| The receiver suddenly switches off or the **iPod iPhone** indicator blinks. | • Check that there are no loose strands of speaker wire touching the rear panel or another set of wires. If so, re-attach the speaker wires, making sure there are no stray strands.<br>• The receiver may have a serious problem. Disconnect from the power and call a Pioneer authorized independent service company. |
| During loud playback the power suddenly switches off. | • Turn down the volume.<br>• Lower the 63 Hz and 125 Hz equalizer levels in the *Manual MCACC setup* on page 75.<br>• Switch on the digital safety feature. While holding down **ENTER** on the front panel, press ⏻ **STANDBY/ON** to set this receiver to the standby mode. Use **TUNE** ⬆/⬇ to select **D.SAFETY ◄OFF►**, and then use **PRESET** ⬅/➡ to select **1** or **2** (select **D.SAFETY ◄OFF►** to deactivate this feature). If the power switches off even with **2** switched on, turn down the volume. With **1** or **2** on, some features may be unavailable. |
| The unit does not respond when the buttons are pressed. | • Try switching the receiver off, then back on again.<br>• Try disconnecting the power cord, then connect again. |

| Symptom | Remedy |
|---|---|
| **AMP ERR** blinks in the display, then the power automatically switches off. The **ADVANCED MCACC** blinks and the power does not turn on. | • The receiver may have a serious problem. Do not try switching the receiver on. Unplug the receiver from the wall and call a Pioneer authorized independent service company. |
| The **PQLS** flashes and power turns off. | • There is a problem with the receiver's power unit or fan. Try turning on the power after 1 minute. If the same thing happens, the receiver is damaged. Unplug the receiver from the wall and call a Pioneer authorized independent service company. (Other symptoms may appear when the power is turned on.) |
| **AMP OVERHEAT** and the power indicator flash and the power turns off. | • Allow the unit to cool down in a well-ventilated place before switching back on.<br>• Wait at least 1 minute, then try turning the power on again. |
| The receiver suddenly power off or **ADVANCED MCACC** flashes. | • The power unit is damaged. Unplug the receiver from the wall and call a Pioneer authorized independent service company. |
| *VSX-1325 only:* Display blinks **12V TRG ERR**. | • An error has arisen in the 12 V trigger jacks. Reconnect accurately then turn the power back on. |

## No sound

| Symptom | Remedy |
|---|---|
| No sound is output when an input function is selected.<br>No sound is output from the front speakers. | • Check the volume, mute setting (press **MUTE**) and speaker setting (press **SPEAKERS**).<br>• Make sure the correct input function is selected.<br>• Check that the MCACC setup microphone is disconnected.<br>• Make sure the correct input signal is selected (press **SIGNAL SEL**). Note that when **PCM** is selected, you won't be able to hear any other signal format.<br>• Check that the source component is connected properly (see *Connecting your equipment* on page 15).<br>• Check that the speakers are connected properly (see *Connecting the speakers* on page 19). |
| No sound from the surround or center speakers. | • Check that the Stereo listening mode or the Front Stage Surround Advance mode isn't selected; select one of the surround listening modes (see *Listening in surround sound* on page 52).<br>• Check that the surround/center speakers are not set to **NO** (see *Speaker Setting* on page 83).<br>• Check the channel level settings (see *Channel Level* on page 84).<br>• Check the speaker connections (see *Connecting the speakers* on page 19). |
| No sound from surround back speakers. | • Check that the surround back speakers are set to **LARGE** or **SMALL**, and the surround speakers are not set to **NO** (see *Speaker Setting* on page 83).<br>• Check the speaker connections (see *Connecting the speakers* on page 19). If only one surround back speaker is connected, make sure it's connected to the left channel speaker terminal.<br>• Surround back speakers will not play while the **Speaker System** is set to **Speaker B** and audio is being played through speaker B. |
| No sound from front height or front wide speakers. | • Check that the front height or front wide speakers are set to **LARGE** or **SMALL**, and the surround speakers are not set to **NO** (see *Speaker Setting* on page 83).<br>• Check the speaker connections (see *Connecting the speakers* on page 19). |
| No sound from subwoofer. | • Check that the subwoofer is connected properly, switched on and the volume turned up.<br>• If your subwoofer has a sleep function, make sure it is switched off.<br>• Make sure that the Subwoofer setting is **YES** or **PLUS** (see *Speaker Setting* on page 83).<br>• The crossover frequency may be set too low; try setting it higher to match the characteristics of your other speakers (see *Speaker Setting* on page 83).<br>• If there is very little low frequency information in the source material, change your speaker settings to Front: **SMALL** / Subwoofer: **YES**, or Front: **LARGE** / Subwoofer: **PLUS** (see *Speaker Setting* on page 83).<br>• Check that the LFE channel is not set to **OFF**, or to a very quiet setting (see *Setting the Audio options* on page 59).<br>• Check the speaker level settings (see *Channel Level* on page 84). |

| Symptom | Remedy |
|---|---|
| No sound from one speaker. | • Check the speaker connection (see *Connecting the speakers* on page 19).<br>• Check the speaker level settings (see *Channel Level* on page 84).<br>• Check that the speaker hasn't been set to **NO** (see *Speaker Setting* on page 83).<br>• The channel may not be recorded in the source. By using one of the advanced effect listening modes, you may be able to create the missing channel (see *Listening in surround sound* on page 52). |
| Sound is produced from analog components, but not from digital ones (DVD, LD, CD-ROM, etc.). | • Check that the input signal type is set to **DIGITAL** (see *Choosing the input signal* on page 55).<br>• Make sure that the digital input is assigned correctly for the input jack the component is connected to (see *The Input Setup menu* on page 39).<br>• Check the digital output settings on the source component.<br>• If the source component has a digital volume control, make sure this is not turned down.<br>• Make sure that the multichannel analog inputs are not selected. Select any other input function. |
| No sound is output or a noise is output when Dolby Digital/DTS software is played back. | • Check that your DVD player is compatible with Dolby Digital/DTS discs.<br>• Check the digital output settings of your DVD player. Make sure that the DTS signal output is set to On.<br>• If the source component has a digital volume control, make sure this is not turned down. |
| No sound when using the **Home Menu**. | • If the HDMI input function is selected, sound is muted until exiting the **Home Menu**. |

## Other audio problems

| Symptom | Remedy |
|---|---|
| Broadcast stations cannot be selected automatically, or there is considerable noise in radio broadcasts. | *For FM broadcasts*<br>• Fully extend the FM wire antenna, adjust the position for best reception and secure to a wall, etc.<br>• Use an outdoor antenna for better reception (see page 30).<br>*For AM broadcasts*<br>• Adjust the position and direction of the AM antenna.<br>• Use an outdoor antenna for better reception (see page 30).<br>• Noise may be caused by interference from other equipment, such as a fluorescent light, motor, etc. Switch off or move the other equipment, or move the AM antenna. |
| Noise is output when scanning a DTS CD. | • This is not a malfunction of the receiver. The scan function of your player alters the digital information, making it unreadable, resulting in noise being output. Lower the volume when scanning. |
| When playing a DTS format LD there is audible noise on the soundtrack. | • Make sure that the input signal type is set to **DIGITAL** (see *Choosing the input signal* on page 55). |
| Can't record audio. | • You can only make a digital recording from a digital source, and an analog recording from an analog source.<br>• For digital sources, make sure that what you're recording isn't copy protected.<br>• Check that the **OUT** jacks are properly connected to the recorders input jacks (see *Connecting other audio components* on page 28). |
| Subwoofer output is very low. | • To route more signal to the subwoofer, set it to **PLUS** or set the front speakers to **SMALL** (see *Speaker Setting* on page 83). |
| Everything seems to be set up correctly, but the playback sound is odd. | • The speakers may be out of phase. Check that the positive/negative speaker terminals on the receiver are matched with the corresponding terminals on the speakers (see *Connecting the speakers* on page 19). |
| The **PHASE CONTROL** feature doesn't seem to have an audible effect. | • If applicable, check that the lowpass filter switch on your subwoofer is off, or the lowpass cutoff is set to the highest frequency setting. If there is a **PHASE** setting on your subwoofer, set it to 0° (or depending on the subwoofer, the setting where you think it has the best overall effect on the sound).<br>• Make sure the speaker distance setting is correct for all speakers (see *Speaker Distance* on page 84). |
| Noise or hum can be heard even when there is no sound being input. | • Check that personal computers or other digital components connected to the same power source are not causing interference. |

| Symptom | Remedy |
|---|---|
| Can't select some Input functions by the **INPUT SELECTOR** on the front panel or the **INPUT SELECT** button on the remote control. | • Check the Input Skip settings in the Input Setup menu.<br>• Check the HDMI Input assignment in the Input Setup menu then try OFF. |
| There seems to be a time lag between the speakers and the output of the subwoofer. | • See *Automatically conducting optimum sound tuning (Auto MCACC)* on page 37 to set up your system again using MCACC (this will automatically compensate for a delay in the subwoofer output). |
| The maximum volume available (shown in the front panel display) is lower than the **+12dB** maximum. | • Check that the Volume Limit is set to **OFF** (see *Volume Setup* on page 87).<br>• The channel level setting may be over **0dB**. |

## ADAPTER PORT

| Symptom | Remedy |
|---|---|
| The *Bluetooth* wireless technology device cannot be connected or operated. Sound from the *Bluetooth* wireless technology device is not emitted or the sound is interrupted. | • Check that no object that emits electromagnetic waves in the 2.4 GHz band (microwave oven, wireless LAN device or *Bluetooth* wireless technology apparatus) is near the unit. If such an object is near the unit, set the unit far from it. Or, stop using the object emitting the electromagnetic waves.<br>• Check that the *Bluetooth* wireless technology device is not too far from the unit and that obstructions are not set between the *Bluetooth* wireless technology device and the unit. Set the *Bluetooth* wireless technology device and the unit so that the distance between them is less than about 10 m and no obstructions exist between them.<br>• Check that the *Bluetooth* ADAPTER and the **ADAPTER PORT** of the unit are correctly connected.<br>• The *Bluetooth* wireless technology device may not be set to the communication mode supporting the *Bluetooth* wireless technology. Check the setting of the *Bluetooth* wireless technology device.<br>• Check that pairing is correct. The pairing setting was deleted from this unit or the *Bluetooth* wireless technology device. Reset the pairing.<br>• Check that the profile is correct. Use a *Bluetooth* wireless technology device that supports A2DP profile and AVRCP profile. |

## Video

| Symptom | Remedy |
|---|---|
| No image is output when an input is selected. | • Check the video connections of the source component (see page 27).<br>• For HDMI, or when digital video conversion is set to **OFF** and a TV and another component are connected with different cords (in *Setting the Video options* on page 61), you must connect your TV to this receiver using the same type of video cable as you used to connect your video component.<br>• Make sure the input assignment is correct for components connected using component video or HDMI cables (see *The Input Setup menu* on page 39).<br>• Check the video output settings of the source component.<br>• Check that the video input you selected on your TV is correct.<br>• Some components (such as video game units) have resolutions that may not be converted. If adjusting this receiver's Resolution setting (in *Setting the Video options* on page 61) and/or the resolution settings on your component or display doesn't work, try switching Digital Video Conversion (in *Setting the Video options* on page 61) to **OFF**. |
| Can't record video. | • Check that the source is not copy-protected.<br>• The video converter is not available when making recordings. Check that the same type of video cable is used for connecting both the recorder and the video source (the one you want to record) to this receiver. |
| Noisy, intermittent, or distorted picture. | • Sometimes a video deck may output a noisy video signal (during scanning, for example), or the video quality may just be poor (with some video game units, for example). The picture quality may also depend on the settings, etc. of your display device. Switch off the video converter and reconnect the source and display device using the same type of connection (component or composite), then start playback again. |

| Symptom | Remedy |
|---|---|
| Video signals are not output from the component terminal. | • When a monitor only compatible with resolutions of 480i is connected to the component terminal and another monitor is connected to the HDMI terminal, the video signals may not be output to the monitor connected to the component terminal. If this happens, do the following:<br>– Turn off the power of the monitor connected to the HDMI terminal.<br>– Change the **VIDEO PARAMETER** menu **RES** setting (page 61).<br>– Video signals from the HDMI terminal cannot be output to the component terminals. Input the video signals from the player or other source to the composite or component terminals. When using the component terminal, assign it at **Input Setup**. |

## Settings

| Symptom | Remedy |
|---|---|
| The Auto MCACC Setup continually shows an error. | • The ambient noise level may be too high. Keep the noise level in the room as low as possible (see also *Problems when using the Auto MCACC Setup* on page 39). If the noise level cannot be kept low enough, you will have to set up the surround sound manually (page 82).<br>• When using only one surround back speaker, connect it to the **SURROUND BACK L** (Single) terminals.<br>• To use a 5.1-channel speaker set, use the surround speakers for the surround channel, not the surround back channel.<br>• Make sure there are no obstacles between the speakers and the microphone.<br>• If **Reverse Phase** is displayed, try the following:<br>– The speaker's wiring (+ and –) may be inverted. Check the speaker connections.<br>– Depending on the type of speakers and their installation conditions, **Reverse Phase** may be displayed even if the speakers are properly connected. If this happens, select **GO NEXT** and continue.<br>– If the speaker is not pointed to the microphone (listening position) or when using speakers that affect the phase (dipole speakers, reflective speakers, etc.), it may not be possible to properly identify the polarity. |
| After using the Auto MCACC Setup, the speaker size setting is incorrect. | • There may have been some low frequency noise in the room from an air-conditioner, motor, etc. Switch off all other appliances in the room and use Auto MCACC Setup again.<br>• Depending on a number of factors (bass reproduction capabilities of the speakers, room size, speaker placement, etc.) this may occur in some cases. Change the speaker setting manually in *Speaker Setting* on page 83, and use the **ALL (Keep SP System)** option for the **Auto MCACC** menu in *Automatic MCACC (Expert)* on page 73 if this is a recurring problem. |
| Can't adjust the Fine Speaker Distance setting (page 76) properly. | • Check that the speakers are all in phase (make sure the positive (**+**) and negative (**–**) terminals are matched up properly). |
| The display shows **KEY LOCK ON** when you try to make settings. | • With the receiver in standby, press ⏻ **STANDBY/ON** for about 10 seconds while holding down **SPEAKERS** to disable the key lock. |
| Most recent settings have been erased. | • The power cord was disconnected from the wall while adjusting this setting.<br>• Settings are only stored if all the zones are turned off. Turn off all the zones before unplugging the power cord. |
| The various system settings are not stored. | • Make sure the blue ⏻ **STANDBY/ON** light has gone out before unplugging. |

## Professional Calibration EQ graphical output

| Symptom | Remedy |
|---|---|
| The EQ response displayed in the graphical output following calibration does not appear entirely flat. | • There are cases where the graph does not appear flat (even when selecting **ALL CH ADJ** in the Auto MCACC Setup) due to adjustments made to compensate for room characteristics to achieve optimal sound.<br>• Areas of the graph may appear identical (before and after) when there is little or no adjustment needed.<br>• The graph may appear to have shifted vertically when comparing before and after measurements. |
| EQ adjustments made using the *Manual MCACC setup* on page 75 do not appear to change the graphical output. | • Despite level adjustments being made, the filters used for analysis may not display these adjustments in the graphical output. However, these adjustments are taken into account by the filters dedicated to overall system calibration. |

| Symptom | Remedy |
|---|---|
| Lower frequency response curves do not seem to have been calibrated for **SMALL** speakers. | • Low frequencies used in bass management (the subwoofer channel) will not change for speakers that have been specified as **SMALL** in the configuration, or do not output these frequencies.<br>• Calibration is performed, but due to your speakers' low frequency limitations, no measurable sound is output for display. |

## Display

| Symptom | Remedy |
|---|---|
| The display is dark or off. | • Press **DIMMER** repeatedly to select a different brightness. |
| You can't get **DIGITAL** to display when using **SIGNAL SEL**. | • Check the digital connections and make sure that the digital inputs are assigned correctly (see *The Input Setup menu* on page 39).<br>• If the multichannel analog inputs are selected, select a different input function. |
| **DIGITAL** or **DTS** does not light when playing Dolby/DTS software. | • These indicators do not light if playback is paused.<br>• Check the playback (especially the digital output) settings of the source component. |
| When playing Dolby Digital or DTS sources, the receiver's format indicators do not light. | • Check that the player is connected using a digital connection.<br>• Make sure that the receiver is set to **AUTO** or **DIGITAL** (see *Choosing the input signal* on page 55).<br>• Check that the player isn't set up so that Dolby Digital and DTS sources are converted to PCM.<br>• Ensure that if there are several audio tracks on the disc, the Dolby Digital or DTS is selected. |
| When playing certain discs, none of the receiver's format indicators light. | • The disc may not contain 5.1/6.1 channel material. Check the disc packaging for more on what audio tracks are recorded on the disc. |
| When playing a disc with the listening mode set to Auto Surround or ALC, **PL II** or **Neo:6** appear on the receiver. | • Make sure that the receiver is set to **AUTO** or **DIGITAL** (see *Choosing the input signal* on page 55).<br>• If a two channel soundtrack is currently playing (including Dolby Surround encoded), then this is not a malfunction. Check the disc packaging for details about the audio tracks available. |
| During playback of DVD-Audio, the display shows **PCM**. | • This will occur when playing DVD-Audio material over the HDMI connection. This is not a malfunction. |
| The power turns off automatically and some indicator flashes, or some indicator flashes and the power does not turn on. | • See the **Power** section (page 89). |

## Remote control

| Symptom | Remedy |
|---|---|
| Cannot be remote controlled. | • Set the remote control unit's remote control mode so that it matches the setting on the main unit (see *Operating multiple receivers* on page 66).<br>• Check whether the receiver's remote control mode is properly set (see *Remote Control Mode Setup* on page 87).<br>• Try replacing the batteries in the remote control (see *Loading the batteries* on page 10).<br>• Be sure to operate within 7 m (23 feet) and a 30° angle of the remote sensor on the front panel (see *Operating range of remote control unit* on page 10).<br>• Check that there are no obstacles between the receiver and the remote control.<br>• Make sure that there is no fluorescent or other strong light shining on to the remote sensor.<br>• Check the connections of the **CONTROL IN** jacks (see *Operating other Pioneer components with this unit's sensor* on page 35). |
| Other components can't be operated with the system remote. | • If the battery ran down, the preset codes may have been cleared. Re-enter the preset codes.<br>• The preset code may be incorrect. Redo the procedure for entering preset codes.<br>• When commands from the remote control units of other devices are registered using the learning function, in some cases they may not be learned properly. In this case, register the commands again using the learning function (see *Programming signals from other remote controls* on page 67). If they still do not work, they may be in a special format that cannot be registered on this receiver's remote control. Operate the device using another remote control. |

## Web Control

| Symptoms | Causes | Remedies |
|---|---|---|
| Top Menu screen is not displayed on browser. | This receiver's IP address has not been entered into the browser correctly. | Check the receiver's IP address and enter it correctly in the browser (page 85). |
| Receiver cannot be operated from browser. | JavaScript is disabled on the internet browser. | Enable JavaScript. |
| | The browser is not compatible with JavaScript. | Use an internet browser that is compatible with JavaScript. |
| Receiver's power does not turn on when the power is turned on using the **Web Control** function. | **Network Standby** at **Network Setup** is set to **OFF**. | Set **Network Standby** at **Network Setup** to **ON** (page 86). |

## HDMI

| Symptom | Remedy |
|---|---|
| The HDMI indicator blinks continuously. | • Check all the points below. |
| No picture or sound. | • This receiver is HDCP-compatible. Check that the components you are connecting are also HDCP-compatible. If they are not, please connect them using the component or composite video jacks.<br>• Depending on the connected source component, it's possible that it will not work with this receiver (even if it is HDCP-compatible). In this case, connect using the component or composite video jacks between source and receiver.<br>• If the problem still persists when connecting your HDMI component directly to your monitor, please consult the component or monitor manual or contact the manufacturer for support.<br>• If video images do not appear on your TV, try adjusting the resolution, DeepColor or other setting for your component.<br>• While analog video signals are being output over HDMI, use a separate connection for audio output.<br>• To output signals in DeepColor, use an HDMI cable (High Speed HDMI® Cable) to connect this receiver to a component or TV with the DeepColor feature. |
| No picture. | • Try changing the Resolution setting (in *Setting the Video options* on page 61).<br>• *VSX-1325 only:* Set the HDMI output setting to the connected HDMI OUT terminal (in *Switching the HDMI output (VSX-1325 only)* on page 64). |
| No sound, or sound suddenly ceases. | • Check that the HDMI AV setting is set to **AMP/THROUGH**.<br>• If the component is a DVI device, use a separate connection for the audio.<br>• If analog video is being output over HDMI, please use a separate connection for the audio.<br>• Check the audio output settings of the source component.<br>• HDMI format digital audio transmissions require a longer time to be recognized. Due to this, interruption in the audio may occur when switching between audio formats or beginning playback.<br>• Turning on/off the device connected to this unit's HDMI OUT terminal during playback, or disconnecting/connecting the HDMI cable during playback, may cause noise or interrupted audio. |
| Noisy or distorted picture. | • Sometimes a video deck may output a noisy video signal (during scanning, for example), or the video quality may just be poor (with some video game units, for example). The picture quality may also depend on the settings, etc. of your display device. Switch off the video converter and reconnect the source and display device using the same type of connection (component or composite), then start playback again.<br>• If the problem still persists when connecting your HDMI component directly to your monitor, please consult the component or monitor manual or contact the manufacturer for support. |
| **HDCP ERROR** shows in the display. | • Check whether or not the connected component is compatible with HDCP. If it is not compatible with HDCP, reconnect the source device using a different type of connection (component or composite). Some components that are compatible with HDCP still cause this message to be displayed, but so long as there is no problem with displaying video, this is not a malfunction. |
| When **Control** with HDMI is set to **ON**, the **HDMI Input** assignment at **Input Setup** is canceled. | • Even when **Control** with HDMI is set to **ON**, for **Digital In** assignment of **HDMI 1** is not canceled, so in this case use the **HDMI 1** input. |

| Symptom | Remedy |
|---|---|
| Synchronized operation not possible using **Control** with HDMI function. | • Check the HDMI connections.<br>• The cable may be damaged.<br>• Select **ON** for the **Control** with HDMI setting (see *HDMI Setup* on page 56).<br>• Select **ALL** for the **Control Mode** with HDMI setting (see *HDMI Setup* on page 56).<br>• Turn the TV's power on before turning on this receiver's power.<br>• Set the TV side Control with HDMI setting to **ON** (see TV's operating instructions).<br>• *VSX-1325 only:* Connect the TV to the **HDMI OUT 1** terminal and set the HDMI output to **HDMI OUT 1**. Then turn on first the TV's power, then this receiver's power. |

## Important information regarding the HDMI connection

There are cases where you may not be able to route HDMI signals through this receiver (this depends on the HDMI-equipped component you are connecting–check with the manufacturer for HDMI compatibility information).

If you aren't receiving HDMI signals properly through this receiver (from your component), please try one of the following configurations when connecting up.

### Configuration A

Use component video cables to connect the video output of your HDMI-equipped component to the receiver's component video input. The receiver can then convert the analog component video signal to a digital HDMI signal for transmission to the display. For this configuration, use the most convenient connection (digital is recommended) for sending audio to the receiver. See the operating instructions for more on audio connections.

**Note**

- The picture quality will change slightly during conversion.

### Configuration B

Connect your HDMI-equipped component directly to the display using an HDMI cable. Then use the most convenient connection (digital is recommended) for sending audio to the receiver. See the operating instructions for more on audio connections. Set the display volume to minimum when using this configuration.

**Note**

- If your display only has one HDMI terminal, you can only receive HDMI video from the connected component.
- Depending on the component, audio output may be limited to the number of channels available from the connected display unit (for example audio output is reduced to 2 channels for a monitor with stereo audio limitations).
- If you want to switch the input function, you'll have to switch functions on both the receiver and your display unit.
- Since the sound is muted on the display when using the HDMI connection, you must adjust the volume on the display every time you switch input functions.

## USB interface

| Symptoms | Causes | Remedies |
|---|---|---|
| The folders/files stored on a USB memory device are not displayed. | The folders/files are currently stored in a region other than the FAT (File Allocation Table) region. | Store the folders/files in the FAT region. |
| | The number of levels in a folder is more than 8. | Limit the maximum number of levels in a folder to 8 (page 43). |
| | There are more than 30 000 folders/files stored in a USB memory device. | Limit the maximum number of folders/files stored in a USB memory device to 30 000 (page 43). |
| | The audio files are copyrighted. | Copyrighted audio files stored on a USB memory device cannot be played back (page 43). |

| Symptoms | Causes | Remedies |
|---|---|---|
| A USB memory device is not recognized. | The USB memory device does not support the mass storage class specifications. | Try using a USB memory device compatible with the mass storage class specifications. Note that there are cases where even the audio files stored on a USB memory device compatible with the mass storage class specifications are not played back on this receiver (page 43). |
| | | Connect the USB memory device and switch on this receiver (page 34). |
| | A USB hub is currently being used. | This receiver does not support USB hubs (page 43). |
| | This receiver recognizes the USB memory device as a fraud. | Switch off and on again this receiver. |
| A USB memory device is connected and displayed, but the audio files stored on the USB memory device cannot be played back. | Some formats of USB memory devices, including FAT 12, NTFS, and HFS, cannot be played back on this receiver. | Check whether the format of your USB memory device is either FAT 16 or FAT 32. Note that the FAT 12, NTFS, and HFS formats cannot be played back on this receiver (page 43). |
| | The file format cannot be properly played back on this receiver. | See the list of file formats that can be played back on this receiver (page 44). |
| Cannot detect USB keyboard. | The USB keyboard is routed through a USB hub. | This receiver is not compatible with USB hubs. Plug the keyboard directly into the receiver. |
| | A PS2 keyboard is routed through a PS2/USB connector. | PS2 keyboards cannot be used with this receiver, even if routed through a PS2/USB connector. Use a USB keyboard. |
| | Keyboard is not a USB HID Class device. | Some devices will not be detected. Use a USB HID Class keyboard. |
| Cannot enter correct text using the USB keyboard. | Keyboard is not US-international layout keyboard. | Use a US-international layout keyboard. NB: Some characters cannot be entered. |

## Internet radio

| Symptoms | Causes | Remedies |
|---|---|---|
| Cannot access the network. ("**Connection Error**" shows in the display.) | The LAN cable is not firmly connected. | Firmly connect the LAN cable (page 32). |
| | The router is not switched on. | Switch on the router. |
| | The network device was switched on when this receiver was already on. | Switch the network device on before the receiver. |
| Cannot listen to Internet radio stations. ("**Connection Error**" shows in the display.) | The firewall settings for components on the network are currently in operation. | Check the firewall settings for components on the network. |
| | You are currently disconnected from the Internet. | Check the connection settings for components on the network, and consult with your network service provider if necessary (page 85). |
| | The URL for the Internet radio station is incorrectly programmed. | Check that the URL was correctly entered when programming. |
| | The broadcasts from an Internet radio station are stopped or interrupted. | Broadcasts may be interrupted or suspended by the radio station. |
| | An Internet radio station is selected whose protocol this receiver does not recognize. | This receiver does not recognize protocols other than 'http' and 'mms'. |
| | An Internet radio station had closed or moved. | Enter new internet radio station on the Internet Radio Setup. |
| Cannot listen to Internet radio stations. ("**File Format Error**" shows in the display.) | Broadcast is in a format not compatible with this receiver. | This receiver cannot play audio in formats other than MP3 or WMA. Also, even if they are MP3 or WMA formats, this receiver may not be able to play back. |

| Symptoms | Causes | Remedies |
|---|---|---|
| The Internet radio settings screen cannot be displayed on the computer Internet browser. | This receiver's IP address has not been entered into the browser correctly. | Check the receiver's IP address and enter it correctly on the browser (page 85). |
| | JavaScript is disabled on the Internet browser. | Enable JavaScript. |
| | The browser is not compatible with JavaScript. | Use an Internet browser that is compatible with JavaScript. |

## XM radio messages

| Status messages | Cause | Action |
|---|---|---|
| **Check XM Tuner** | The XM Mini-Tuner is not installed or not fully seated in the XM Mini-Tuner Home Dock or the XM Mini-Tuner Dock is not connected to this receiver. | Confirm the XM Mini-Tuner is fully seated in the dock and check the XM Mini-Tuner Home Dock cable is connected to this receiver. |
| **Check Antenna** | The XM antenna is not connected to the XM Mini-Tuner Home Dock or the XM antenna cable is damaged. | Check that the XM antenna is securely connected to the XM Mini-Tuner Home Dock and check the antenna cable for damage. Replace the XM antenna if the cable is damaged. |
| **Loading** | The XM Mini-Tuner is acquiring audio or program information from the XM satellite signal. This message can also occur in weak XM signal conditions.<br>Note that this receiver may not respond to some buttons while this message is displayed. | This message should disappear in a few seconds in good signal conditions.<br>If you see this message often, reposition the XM antenna for better signal reception.<br>Use the Antenna Aiming option to optimize the antenna position. |
| **No Signal** | The XM Mini-Tuner is not receiving the XM satellite signal. Something may be blocking the XM antenna's view of the satellites or the antenna is not properly aimed. | Check for antenna obstructions and reposition the XM antenna to get better signal reception. Use the Antenna Aiming option to optimize the antenna position.<br>See instructions supplied with the XM Mini-Tuner and Home Dock for antenna installation information. |
| **Off Air** | The XM channel you selected is not currently broadcasting. | Check back later. |
| **CH Unauthorized** | You selected an XM channel that is blocked or cannot be received with your XM subscription package. | Consult the latest channel guide at www.xmradio.com for the current list of channels.<br>For information on receiving this channel, visit www.xmradio.com or contact XM Satellite Radio at 1-800-967-2346. |
| **CH Unavailable** | The selected channel is not available. The channel may have been reassigned to a different channel number.<br>This message may occur initially with a new radio or a radio that has not received XM's signal for an extended period. | Consult the latest channel guide at www.xmradio.com for the current list of channels. For cases of a new radio or a radio that has not received XM's signal for an extended period, allow the radio to receive the XM satellite signal for at least 5 minutes and then try to select the channel again. |
| – – – – – – – – | No artist name or song title is available for this selection. | No action required. |

| Status messages | Cause | Action |
|---|---|---|
| **Upgrade XM Tuner** | The connected XM CNP-1000 is incompatible. This receiver features advanced technology that is designed for use with the XM Mini-Tuner. | Contact XM Listener Care (1-800-967-2346) and ask about upgrading your XM CNP-1000 to an XM Mini-Tuner.<br>Have this receiver's model name and CNP-1000 XM Radio ID number ready beforehand, and explain that this receiver is displaying the message **Upgrade XM Tuner**.<br>If you already have an XM Mini-Tuner connected and you see this message, turn off this receiver, make sure the XM Mini-Tuner is properly seated in the Mini-Tuner Home Dock, and then turn this receiver on again. If the message reappears, contact XM Listener Care and explain the issue that you're experiencing and the corrective actions you've tried. |
| **XM Power Error** | A short-circuit occurring in the antenna or surrounding antenna cable. | Make sure that there is nothing unusual with the antenna or antenna cable. Switch the power off, then back on again. |

## SIRIUS radio messages

| Status messages | Cause | Action |
|---|---|---|
| **Antenna Error** | The SIRIUS antenna is not properly connected. | Check that the antenna cable is attached securely. |
| **Check Sirius Tuner** | The SiriusConnect™ tuner is not properly connected. | Check that the 8 pin mini DIN cable and AC Adapter are attached securely. |
| **Acquiring Signal** | The SIRIUS signal is too weak at the current location. | Check for antenna obstructions and reposition the SIRIUS antenna to get better signal reception. Use the Antenna Aiming option to optimize the antenna position. |
| **Subscription Updating** | Unit is updating subscription. | Wait until the channel subscription has been updated. |
| **Updating Channels** | Unit is updating the channel information. | Wait until the channel information has been updated. |
| **Invalid Channel** | Selected channel is not available/does not exist. | Select another channel. |
| **Firmware Updating** | The SiriusConnect™ tuner's firmware is being updated. | Wait for updating to finish. |

If the problem is not solved after the troubleshooting above, if the screen freezes unexpectedly or if the buttons on the remote control or front panel stop working completely, do the following:

- Press ⏻ **STANDBY/ON** on the front panel to turn off the power, then turn the power back on.
- If the power cannot be turned off, press and hold ⏻ **STANDBY/ON** on the front panel for over 10 seconds. The power will turn off. (In this case, the various settings made on the receiver may be cleared.)

## Surround sound formats

Below is a brief description of the main surround sound formats you'll find on BDs, DVDs, satellite, cable and terrestrial broadcasts, and video cassettes.

### Dolby

The Dolby technologies are explained below. See www.dolby.com for more detailed information.

*Manufactured under license from Dolby Laboratories. Dolby, Pro Logic, Surround EX and the double-D symbol are trademarks of Dolby Laboratories.*

### DTS

The DTS technologies are explained below. See www.dtstech.com for more detailed information.

*Manufactured under license under U.S. Patent #'s: 5,451,942; 5,956,674; 5,974,380; 5,978,762; 6,226,616; 6,487,535; 7,212,872; 7,333,929; 7,392,195; 7,272,567 & other U.S. and worldwide patents issued & pending. DTS and the Symbol are registered trademarks, & DTS-HD, DTS-HD Master Audio, and the DTS logos are trademarks of DTS, Inc. Product includes software. © DTS, Inc. All Rights Reserved.*

### Windows Media Audio 9 Professional

Windows Media Audio 9 Professional (WMA9 Pro) is a discrete surround format developed by Microsoft Corporation.

*Windows Media and the Windows logo are trademarks or registered trademarks of Microsoft Corporation in the United States and/or other countries.*

## About THX

The THX technologies are explained below. See www.thx.com for more detailed information.

- **THX Cinema processing**

THX is an exclusive set of standards and technologies established by THX Ltd. THX grew from George Lucas' personal desire to make your experience of the film soundtrack, in both movie theatres and in your home theatre, as faithful as possible to what the director intended. Movie soundtracks are mixed in special movie theatres called dubbing stages and are designed to be played back in movie theatres with similar equipment and conditions. This same soundtrack is then transferred directly onto Laserdisc, VHS tape, DVD, etc., and is not changed for playback in a small home theatre environment. THX engineers developed patented technologies to accurately translate the sound from the movie theatre environment into the home, correcting the tonal and spatial errors that occur. On this product, when the THX indicator is on, THX features are automatically added in Cinema modes (e.g. THX Cinema, THX Surround EX).

- **Re-Equalization**

The tonal balance of a film soundtrack will be excessively bright and harsh when played back over audio equipment in the home because film soundtracks were designed to be played back in large movie theaters using very different professional equipment. Re-Equalization restores the correct tonal balance for watching a movie soundtrack in a small home environment.

- **Timbre Matching**

The human ear changes our perception of a sound depending on the direction from which the sound is coming. In a movie theatre, there is an array of surround speakers so that the surround information is all around you. In a home theatre, you use only two speakers located to the side of your head. The Timbre Matching feature filters the information going to the surround speakers so that they more closely match the tonal characteristics of the sound coming from the front speakers. This ensures seamless panning between the front and surround speakers.

- **Adaptive Decorrelation**

In a movie theatre, a large number of surround speakers help create an enveloping surround sound experience, but in a home theatre there are usually only two speakers. This can make the surround speakers sound like headphones that lack spaciousness and envelopment. The surround sounds will also collapse into the closest speaker as you move away from the middle seating position. Adaptive Decorrelation slightly changes one surround channel's time and phase relationship with respect to the other surround channel. This expands the listening position and creates—with only two speakers—the same spacious surround experience as in a movie theatre.

- **THX Select2 Plus**

Before any home theatre component can be THX Select2 Plus certified, it must incorporate all the features above and also pass a rigorous series of quality and performance tests. Only then can a product feature the THX Select2 Plus logo, which is your guarantee that the Home Theatre products you purchase will give you superb performance for many years to come. THX Select2 Plus requirements cover every aspect of the product including pre-amplifier and power amplifier performance and operation, and hundreds of other parameters in both the digital and analog domain.

- **THX Surround EX**

THX Surround EX - Dolby Digital Surround EX is a joint development of Dolby Laboratories and the THX Ltd. In a movie theater, film soundtracks that have been encoded with Dolby Digital Surround EX technology are able to reproduce an extra channel which has been added during the mixing of the program. This channel, called Surround Back, places sounds behind the listener in addition to the currently available front left, front center, front right, surround right, surround left and subwoofer channels. This additional channel provides the opportunity for more detailed imaging behind the listener and brings more depth, spacious ambience and sound localization than ever before. Movies that were created using the Dolby Digital Surround EX technology, when released into the home consumer market may exhibit wording to that effect on the packaging. A list of movies created using this technology can be found on the Dolby web site at www.dolby.com.
Only amplifier and controller products bearing the THX Surround EX logo, when in the THX Surround EX mode, faithfully reproduce this new technology in the home.
This product may also engage the "THX Surround EX" mode during the playback of 5.1 channel material that is not Dolby Digital Surround EX encoded. In such case the information delivered to the Surround Back channel will be program dependent and may or may not be very pleasing depending on the particular soundtrack and the tastes of the individual listener.

- **Boundary Gain Compensation™**

Depending on the listener's and the subwoofer's position, the listener may experience an excessive bass effect. This feature compensates for excessive bass resulting from a boundary gain effect. This feature is designed to operate when used with a subwoofer certified to THX Select2™ specifications.

- **THX Loudness Plus Description**

THX Loudness Plus is a new volume control technology featured in THX Ultra2 Plus™ and THX Select2 Plus™ Certified amplifiers. With THX Loudness Plus, home theater audiences can now experience the rich details in a surround mix at any volume level. A consequence of turning the volume below Reference Level is that certain sound elements can be lost or perceived differently by the listener. THX Loudness Plus compensates for the tonal and spatial shifts that occur when the volume is reduced by intelligently adjusting ambient surround channel levels and frequency response. This enables users to experience the true impact of soundtracks regardless of the volume setting. THX Loudness Plus is automatically applied when listening in any THX listening mode. The new THX Cinema, THX Music, and THX Games modes are tailored to apply the proper THX Loudness Plus settings for each type of content.

- **ASA Description**

ASA is a proprietary THX technology which processes the sound fed to 2 side and 2 back surround speakers to provide the optimal surround sound experience. When you set up your home theater system using all eight speaker outputs (Left, Center, Right, Surround Right, Surround Back Right, Surround Back Left, Surround Left and Subwoofer), be sure to go to the THX Audio Set-up screen and choose the setting that most closely corresponds to the speaker spacing, which will re-optimize the surround sound-field. ASA is used in three modes; THX Ultra2 Cinema, THX Ultra2 Music and THX Ultra2 Games.

- **THX Select2 Cinema**

THX Select2 Cinema mode plays 5.1 movies using all 8 speakers giving you the best possible movie watching experience. In this mode, ASA processing blends the side surround speakers and back surround speakers providing the optimal mix of ambient and directional surround sounds.
DTS-ES (Matrix and 6.1 Discrete) and Dolby Digital Surround EX encoded soundtracks will be automatically detected in Select2 Cinema mode if the appropriate flag has been encoded.
Some Dolby Digital Surround EX soundtracks are missing the digital flag that allows automatic switching. If you know that the movie that you are watching is encoded in Surround EX, you can manually select the THX Surround EX playback mode, otherwise THX Select2 Cinema mode will apply ASA processing to provide optimum replay.

- **THX Select2 Music**

For the playback of multi-channel music the THX Select2 Music mode should be selected. In this mode THX ASA processing is applied to the surround channels of all 5.1 encoded music sources such as DTS, Dolby Digital and DVD-Audio to provide a wide stable rear soundstage.

- **THX Select2 Games**

For the playback of stereo and multi-channel game audio the THX Select2 Games mode should be selected. In this mode THX ASA processing is applied to the surround channels of all 5.1 and 2.0 encoded game sources such as analog, PCM, DTS and Dolby Digital. This accurately places all game audio surround information, providing a full 360 degree playback environment. THX Select2 Games mode is unique as it gives you a smooth transition of audio in all points of the surround field.

*THX, the THX logo and Select2 Plus are trademarks of THX Ltd. which may be registered in some jurisdictions. All rights reserved. All other trademarks are the property of their respective owners.*

## About iPod

Made for iPod

Works with iPhone

"Made for iPod" means that an electronic accessory has been designed to connect specifically to iPod and has been certified by the developer to meet Apple performance standards.

"Works with iPhone" means that an electronic accessory has been designed to connect specifically to iPhone and has been certified by the developer to meet Apple performance standards.

Apple is not responsible for the operation of this device or its compliance with safety and regulatory standards.

*iPod is a trademark of Apple Inc., registered in the U.S. and other countries.*
*iPhone is a trademark of Apple Inc.*

## About SIRIUS and XM

**Important**

- XM Radio is only supported on the VSX-1325. The VSX-1125 only supports SIRIUS Radio.

SIRIUS, XM and all related marks and logos are trademarks of Sirius XM Radio Inc. and its subsidiaries. All other marks and logos are the property of their respective owners. All rights reserved. SIRIUS and XM subscriptions sold separately. Taxes and a one-time activation fee may apply. XM tuners and home docks or SIRIUS tuners (each sold separately) are required to receive the SIRIUS or XM satellite radio service. All programming and fees subject to change. It is prohibited to copy, decompile, disassemble, reverse engineer, hack, manipulate or otherwise make available any technology or software incorporated in receivers compatible with the SIRIUS or XM Satellite Radio Systems. Service not available in Alaska and Hawaii.

*SIRIUS, XM and all related marks and logos are trademarks of Sirius XM Radio Inc. and its subsidiaries. All rights reserved. Service not available in Alaska and Hawaii.*

Record the SiriusConnect™ tuner ID below for reference.

☐☐☐☐☐☐☐☐☐☐☐☐

Record the XM Radio ID below for reference.

☐☐☐☐☐☐☐☐

Note: The XM Radio ID does not use the letters “I”, “O”, “S” or “F”.

## Auto Surround, ALC and Stream Direct with different input signal formats

The following charts show what you will hear with different input signal formats, depending on the Stream Direct mode (see *Using Stream Direct* on page 54) you have selected.

### Stereo (2 channel) signal formats

| Input signal format | Auto Surround / ALC / DIRECT | PURE DIRECT |
|---|---|---|
| **Surround Back speaker(s): Connected** | | |
| Dolby Digital Surround | **DD Pro Logic IIx MOVIE** | **DD Pro Logic IIx MOVIE** |
| DTS Surround | **Neo:6 CINEMA** | **Neo:6 CINEMA** |
| Other stereo sources | Stereo playback | Stereo playback |
| Analog sources | *As above* | ANALOG DIRECT (stereo) |
| PCM sources | *As above* | PCM DIRECT |
| DVD-A sources | *As above* | *As above* |
| SACD sources | *As above* | *As above* |
| **Surround Back speaker(s): Not connected** | | |
| Dolby Digital Surround | **DD Pro Logic II MOVIE** | **DD Pro Logic II MOVIE** |
| DTS Surround | **Neo:6 CINEMA** | **Neo:6 CINEMA** |
| Other stereo sources | Stereo playback | Stereo playback |
| Analog sources | *As above* | ANALOG DIRECT (stereo) |
| PCM sources | *As above* | PCM DIRECT |
| DVD-A sources | *As above* | *As above* |
| SACD sources | *As above* | *As above* |

### Multichannel signal formats

| Input signal format | Auto Surround / ALC | PURE DIRECT / DIRECT |
|---|---|---|
| **Surround Back speaker(s): Connected** | | |
| Dolby Digital EX (6.1 channel flagged) | **Dolby Digital EX**<br>**DD Pro Logic IIx MOVIE**[a] | **Dolby Digital EX**<br>**DD Pro Logic IIx MOVIE**[a] |
| DTS-ES (6.1 channel sources/6.1 channel flagged) | **DTS-ES** (Matrix/Discrete) | **DTS-ES** (Matrix/Discrete) |
| DTS sources (5.1 channel encoding) | Straight decoding | Straight decoding |
| DTS-HD sources | *As above* | *As above* |
| Other 5.1/6.1/7.1 channel sources | *As above* | *As above* |
| **Surround Back speaker(s): Not connected** | | |
| DVD-A sources/Multi-ch PCM | Straight decoding | Straight decoding |
| SACD sources (5.1 channel encoding) | *As above* | *As above* |
| Other 5.1/6.1/7.1 channel sources | *As above* | *As above* |

a.Unavailable with only one surround back speaker connected.

## Preset code list

You should have no problem controlling a component if you find the manufacturer in this list, but please note that there are cases where codes for the manufacturer in the list will not work for the model that you are using. There are also cases where only certain functions may be controllable after assigning the proper preset code.

**Important**

- We do not guarantee the operations of all the manufacturers and devices listed. Operation may not be possible even if a preset code is entered. If you can't find a preset code that matches the component you want to control, you can still teach the remote individual commands from another remote control (see *Programming signals from other remote controls* on page 67).

*example:*

**TV** — Category

**Pioneer** 0004 — Preset code

Manufacturer

### TV

**Pioneer** 0004, 0006, 0113, 0115, 0116, 0117, 0119, 0122, 0123
**Admiral** 0001, 0014
**Adventura** 0012
**Aiwa** 0002
**Akai** 0002, 0100
**Albatron** 0097
**Alleron** 0009
**America Action** 0104
**Amtron** 0008
**Anam** 0104
**Anam National** 0003, 0008
**AOC** 0004, 0005, 0006, 0100
**Apex** 0021, 0102, 0106
**Audiovox** 0008, 0104
**Aventura** 0103
**Axion** 0094
**Bang & Olufsen** 0111
**Belcor** 0004
**Bell & Howell** 0001
**Benq** 0064
**Bradford** 0008, 0104
**Brillian** 0109
**Brockwood** 0004
**Broksonic** 0104
**Candle** 0004, 0006, 0012, 0100
**Carnivale** 0100
**Carver** 0101
**CCE** 0110
**Celebrity** 0002
**Celera** 0106
**Changhong** 0106
**Citizen** 0004, 0006, 0008, 0100
**Clarion** 0104
**Coby** 0056
**Colortyme** 0004, 0006
**Concerto** 0004, 0006
**Contec** 0104
**Contec/Cony** 0007, 0008
**Craig** 0008, 0104
**Crosley** 0081, 0101
**Crown** 0008, 0104
**CTX** 0063
**Curtis Mathes** 0000, 0004, 0006, 0014, 0100, 0101
**CXC** 0008, 0104
**Cytron** 0093
**Daewoo** 0004, 0005, 0006, 0023
**Daytron** 0004, 0006
**Dell** 0073
**DiamondVision** 0096
**Dimensia** 0000
**Disney** 0046
**Dumont** 0004, 0011, 0099
**Durabrand** 0041, 0103, 0104
**Dwin** 0014
**Electroband** 0002
**Electrograph** 0107
**Electrohome** 0002, 0003, 0004, 0006
**Element** 0082
**Emerson** 0004, 0006, 0007, 0008, 0009, 0023, 0103, 0104
**Emprex** 0092
**Envision** 0004, 0006, 0100
**Epson** 0061
**ESA** 0103
**Fujitsu** 0009
**Funai** 0008, 0009, 0103, 0104
**Futuretech** 0008, 0104
**Gateway** 0067, 0107, 0108
**GE** 0000, 0003, 0004, 0006, 0010, 0016, 0039
**GFM** 0080, 0084
**Gibralter** 0004, 0011, 0099, 0100
**Goldstar** 0004, 0005, 0006, 0007, 0100
**Gradiente** 0066
**Grunpy** 0008, 0009, 0104
**Haier** 0112
**Hallmark** 0004, 0006
**Harman/Kardon** 0101
**Harvard** 0008, 0104
**Havermy** 0014
**Hewlett Packard** 0053
**Hisense** 0069
**Hitachi** 0004, 0006, 0007
**Hyundai** 0098
**Ilo** 0089, 0091
**IMA** 0008
**Infinity** 0101
**InFocus** 0074
**Initial** 0091
**Insignia** 0085, 0086
**Inteq** 0099
**Janeil** 0012
**JBL** 0101
**JC Penney** 0000, 0004, 0005, 0006, 0010
**JCB** 0002
**Jensen** 0004, 0006
**JVC** 0007, 0010, 0044, 5064
**Kawasho** 0002, 0004, 0006
**KEC** 0104
**Kenwood** 0004, 0006, 0100
**KLH** 0106
**Kloss Novabeam** 0008, 0012
**KTV** 0008, 0100, 0104, 0110
**LG** 0005, 0052, 0078, 0097
**Logik** 0001
**Luxman** 0004, 0006
**LXI** 0000, 0006, 0101, 0102
**Magnavox** 0004, 0006, 0019, 0020, 0037, 0042, 0100, 0101
**Majestic** 0001
**Marantz** 0004, 0006, 0062, 0100, 0101
**Matsushita** 0105
**Maxent** 0087, 0107
**Megapower** 0097
**Megatron** 0006
**Memorex** 0001, 0005, 0006, 0041
**MGA** 0004, 0005, 0006, 0100
**Midland** 0010, 0011, 0099
**Mintek** 0091
**Mitsubishi** 0004, 0005, 0006, 0014, 0045
**Monivision** 0097
**Montgomery Ward** 0001
**Motorola** 0003, 0014
**MTC** 0004, 0005, 0006, 0100
**Multitech** 0008, 0104, 0110
**NAD** 0006, 0102
**NEC** 0003, 0004, 0005, 0006, 0100
**Net-TV** 0107
**Nikko** 0006, 0100
**Norcent** 0060
**Olevia** 0048, 0054, 0059
**Onwa** 0008, 0104
**Oppo** 0095
**Optimus** 0105
**Optoma** 0075
**Optonica** 0014
**Orion** 0025
**Panasonic** 0003, 0010, 0017, 0027, 0105, 0114, 0120, 0121, 0124, 0125
**Penney** 0100, 0102
**Philco** 0003, 0004, 0005, 0006, 0007, 0100, 0101
**Philips** 0003, 0004, 0007, 0019, 0020, 0101
**Philips Magnavox** 0019
**Pilot** 0004, 0100
**Polaroid** 0057, 0106
**Portland** 0004, 0005, 0006
**Prima** 0065
**Princeton** 0097
**Prism** 0010
**Proscan** 0000
**Proton** 0004, 0006, 0007
**Protron** 0055
**Proview** 0068
**Pulsar** 0004, 0011, 0099
**Quasar** 0003, 0010, 0105
**Radio Shack** 0100, 0104
**Radio Shack/Realistic** 0000, 0004, 0006, 0007, 0008
**RCA** 0000, 0003, 0004, 0005, 0006, 0013, 0024, 0035
**Realistic** 0100, 0104
**Runco** 0011, 0099, 0100
**Sampo** 0004, 0006, 0100, 0107
**Samsung** 0004, 0005, 0006, 0007, 0022, 0032, 0076, 0077, 0083, 0100, 0110
**Sansui** 0025
**Sanyo** 0004, 0050
**Sceptre** 0072
**Scotch** 0006
**Scott** 0004, 0006, 0007, 0008, 0009, 0090, 0104

**Sears** 0000, 0004, 0006, 0009, 0101, 0102, 0103
**Sharp** 0004, 0006, 0007, 0014, 0033
**Sheng Chia** 0014
**Shogun** 0004
**Signature** 0001
**Sony** 0002, 0018, 0029, 0030, 0031, 0034
**Soundesign** 0004, 0006, 0008, 0009, 0104
**Squareview** 0103
**SSS** 0004, 0008, 0104
**Starlite** 0008, 0104
**Superscan** 0014
**Supre-Macy** 0012
**Supreme** 0002
**SVA** 0088
**Sylvania** 0004, 0006, 0049, 0079, 0080, 0100, 0101, 0103
**Symphonic** 0008, 0041, 0103, 0104
**Syntax** 0054
**Syntax-Brillian** 0054
**Tandy** 0014
**Tatung** 0003, 0108
**Technics** 0010, 0105
**Techwood** 0004, 0006, 0010
**Teknika** 0001, 0004, 0005, 0006, 0007, 0008, 0009, 0101, 0104
**TMK** 0004, 0006
**TNCi** 0099
**Toshiba** 0026, 0028, 0036, 0038, 0040, 0043, 0102
**Vector Research** 0100
**Vidikron** 0101
**Vidtech** 0004, 0005, 0006
**Viewsonic** 0058, 0107
**Viking** 0012
**Viore** 0089
**Vizio** 0004, 0070, 0071, 0108
**Wards** 0000, 0001, 0004, 0005, 0006, 0009, 0100, 0101
**Waycon** 0102
**Westinghouse** 0047, 0051
**White Westinghouse** 0023
**Yamaha** 0004, 0005, 0006, 0100
**Zenith** 0001, 0004, 0011, 0015, 0099

## DVD

*If operations are not possible using the preset codes below, you may be able to conduct operations with the preset codes for the* **BD**, **DVR (BDR, HDR)**.

**Pioneer** 2014, 2158
**Accurian** 2092
**Advent** 2072
**Aiwa** 2012
**Akai** 2066
**Alco** 2070
**Allegro** 2087
**Amphion MediaWorks** 2037
**AMW** 2037
**Apex** 2002, 2018, 2079, 2080
**Apple** 2058
**Arrgo** 2088
**Aspire** 2073
**Astar** 2052
**Audiovox** 2070
**Axion** 2040
**Bang & Olufsen** 2081
**Blaupunkt** 2080
**Blue Parade** 2078
**Boston** 2059
**Broksonic** 2066
**California Audio Labs** 2068
**CambridgeSoundWorks** 2065
**CineVision** 2087
**Coby** 2029
**Curtis Mathes** 2089
**CyberHome** 2000, 2088
**Cytron** 2039
**Daewoo** 2021, 2087
**Denon** 2026, 2068
**Desay** 2055
**DiamondVision** 2042
**Disney** 2022
**Durabrand** 2090
**Emerson** 2067, 2082, 2091
**Enterprise** 2082
**ESA** 2053, 2091
**Fisher** 2083
**Funai** 2091
**GE** 2016, 2077, 2080
**GFM** 2043
**Go Video** 2087
**Gradiente** 2068
**Greenhill** 2080
**Haier** 2094
**Harman/Kardon** 2030, 2084
**Hitachi** 2011
**Hiteker** 2079
**iLive** 2062
**Ilo** 2038
**Initial** 2038, 2080
**Insignia** 2036, 2064, 2091
**Integra** 2078
**iSymphony** 2060
**JBL** 2084
**JVC** 2013
**Kawasaki** 2070
**Kenwood** 2028, 2068
**KLH** 2070, 2080
**Koss** 2024, 2069, 2075
**Landel** 2093
**Lasonic** 2085
**Lenoxx** 2074, 2090
**LG** 2019, 2051, 2061, 2082, 2087
**Liquid Video** 2075
**Liteon** 2025, 2092
**Magnavox** 2067, 2076, 2091
**Memorex** 2066
**Microsoft** 2077
**Mintek** 2038, 2080, 2086
**Mitsubishi** 2020
**Nesa** 2080
**Next Base** 2093
**Nexxtech** 2056
**Onkyo** 2076
**Oppo** 2041, 2057
**Oritron** 2069, 2075
**Panasonic** 2005, 2007, 2017, 2032, 2033, 2050, 2068, 2076
**Philips** 2045, 2076
**Proceed** 2079
**Proscan** 2077
**Qwestar** 2069
**RCA** 2008, 2016, 2070, 2077, 2078, 2080
**Regent** 2074
**Rio** 2087
**Rowa** 2071
**Samsung** 2009, 2011, 2015, 2031, 2044, 2068
**Sansui** 2066
**Sanyo** 2066, 2083
**Sharp** 2035
**Sherwood** 2063
**Shinsonic** 2086
**Sonic Blue** 2087
**Sony** 2003, 2004, 2010, 2012, 2027, 2046, 2047, 2048
**Sungale** 2054
**Superscan** 2067
**Sylvania** 2023, 2067, 2091
**Symphonic** 2023
**Teac** 2070
**Technics** 2068
**Theta Digital** 2078
**Toshiba** 2001, 2006, 2049, 2066, 2076
**Trutech** 2000
**Urban Concepts** 2076
**US Logic** 2086
**Venturer** 2070
**Xbox** 2077
**Yamaha** 2005, 2068
**Zenith** 2019, 2076, 2082, 2087

## BD

*If operations are not possible using the preset codes below, you may be able to conduct operations with the preset codes for the* **DVD**, **DVR (BDR, HDR)**.

**Pioneer** 2159, 2160
**Denon** 2147, 2148, 2149
**Hitachi** 2144, 2145, 2146
**JVC** 2127, 2128, 2130, 2131, 2132, 2133
**Kenwood** 2044
**LG** 2123, 2124
**Marantz** 2139, 2140
**Mitsubishi** 2137, 2138
**Onkyo** 2126
**Panasonic** 2114, 2115, 2116
**Philips** 2117
**Samsung** 2119
**Sharp** 2141, 2142, 2143
**Sony** 2120, 2121, 2122, 2129
**Toshiba** 2125, 2099
**Yamaha** 2134, 2135, 2136

## DVR (BDR, HDR)

*If operations are not possible using the preset codes below, you may be able to conduct operations with the preset codes for the* **DVD**, **BD**.

**Pioneer** 2103, 2150, 2151, 2152, 2153, 2154, 2155, 2156, 2157
**Panasonic** 2100, 2106
**Sharp** 2104, 2112
**Sony** 2105, 2108, 2109, 2110, 2113
**Toshiba** 2111

## VCR

**Pioneer** 1035
**ABS** 1017
**Adventura** 1005
**Aiwa** 1005
**Alienware** 1017
**American High** 1004
**Asha** 1002
**Audio Dynamics** 1000
**Audiovox** 1003
**Bang & Olufsen** 1032
**Beaumark** 1002
**Bell & Howell** 1001
**Calix** 1003
**Candle** 1002, 1003
**Canon** 1004
**Citizen** 1002, 1003
**Colortyme** 1000
**Craig** 1002, 1003
**Curtis Mathes** 1000, 1002, 1004
**Cybernex** 1002
**CyberPower** 1017
**Daewoo** 1005
**DBX** 1000
**Dell** 1017

**DIRECTV** 1016, 1020, 1022, 1023, 1024, 1027, 1030, 1031
**Dish Network** 1029
**Dishpro** 1029
**Durabrand** 1018
**Dynatech** 1005
**Echostar** 1029
**Electrohome** 1003
**Electrophonic** 1003
**Emerson** 1003, 1004, 1005
**Expressvu** 1029
**Fisher** 1001
**Fuji** 1004
**Funai** 1005
**Garrard** 1005
**Gateway** 1017
**GE** 1002, 1004
**GOI** 1029
**Goldstar** 1000, 1003
**Gradiente** 1005
**Harley Davidson** 1005
**Harman/Kardon** 1000
**Headquarter** 1001
**Hewlett Packard** 1017
**HNS** 1016
**Howard Computers** 1017
**HP** 1017
**HTS** 1029
**Hughes Network Systems** 1016, 1020, 1022, 1023, 1024
**Humax** 1016, 1020
**Hush** 1017
**iBUYPOWER** 1017
**Instant Replay** 1004
**JC Penney** 1000, 1001, 1002, 1003, 1004
**JCL** 1004
**JVC** 1000, 1001, 1020, 1029
**Kenwood** 1000, 1001
**Kodak** 1003, 1004
**LG** 1003
**Linksys** 1017
**Lloyd's** 1005
**LXI** 1003
**Magnavox** 1004, 1018
**Magnin** 1003
**Marantz** 1000, 1001, 1004
**Marta** 1003
**Matsushita** 1004
**Media Center PC** 1017
**MEI** 1004
**Memorex** 1001, 1002, 1003, 1004, 1005, 1018, 1019
**MGN Technology** 1002
**Microsoft** 1017
**Mind** 1017
**Mitsubishi** 1010
**Motorola** 1004
**MTC** 1002
**Multitech** 1002, 1005
**NEC** 1000, 1001
**Nikko** 1003
**Niveus Media** 1017
**Noblex** 1002
**Northgate** 1017
**Olympus** 1004
**Optimus** 1003
**Orion** 1014, 1019
**Panasonic** 1004, 1008
**Philco** 1004
**Philips** 1004, 1011, 1016, 1020, 1022, 1023, 1024, 1025
**Philips Magnavox** 1011
**Pilot** 1003
**Proscan** 1030
**Pulsar** 1018
**Quarter** 1001
**Quartz** 1001
**Quasar** 1004
**Radio Shack** 1003
**Radio Shack/Realistic** 1001, 1002, 1003, 1004, 1005
**Radix** 1003
**Randex** 1003
**RCA** 1002, 1004, 1007, 1016, 1020, 1022, 1030, 1031
**Realistic** 1001, 1002, 1003, 1004, 1005
**ReplayTV** 1026
**Ricavision** 1017
**Runco** 1018
**Samsung** 1002, 1016, 1022, 1024
**Sanky** 1018
**Sansui** 1014, 1019
**Sanyo** 1001, 1002
**Sears** 1001, 1003, 1004
**Sharp** 1012
**Shogun** 1002
**Singer** 1004
**Sonic Blue** 1026
**Sony** 1006, 1009, 1017, 1021
**Stack** 1017
**STS** 1004
**Sylvania** 1004, 1005
**Symphonic** 1005
**Systemax** 1017
**Tagar Systems** 1017
**Tandy** 1001
**Tashiko** 1003
**Teac** 1005
**Technics** 1004
**Teknika** 1003, 1004, 1005
**Tivo** 1016, 1020, 1021, 1022, 1025
**TMK** 1002
**Toshiba** 1015, 1017, 1028
**Totevision** 1002, 1003
**Touch** 1017
**UltimateTV** 1031
**Unitech** 1002
**Vector Research** 1000
**Video Concepts** 1000
**Videosonic** 1002
**Viewsonic** 1017
**Voodoo** 1017
**Wards** 1002, 1003, 1004, 1005
**XR-1000** 1004, 1005
**Yamaha** 1000, 1001
**Zenith** 1013, 1018
**ZT Group** 1017

## Satellite Set Top Box

**Pioneer** 0126, 6097, 6098, 6145
**ADB** 6035, 6001
**Akai** 6102
**Alba** 6005, 6013, 6011
**Allsat** 6102
**Alltech** 6011
**Amstrad** 6033, 6030, 6044
**Anttron** 6013
**Asat** 6102
**Austar** 6000, 6045
**BELL** 6160
**Bell ExpressVu** 6002, 6003
**British Sky Broadcasting** 6030
**Canal** 6105
**Chaparral** 6034
**CNS** 6001
**Coolsat** 6021
**Crossdigital** 6043
**Digenius** 6104
**Digiwave** 6053
**DirecTV** 6070, 6110, 6111, 6062, 6063, 6113, 6008, 6038, 6054, 6069, 6060, 6059, 6043, 6018, 6114, 6115, 6116, 6093
**Dish Network System** 6002, 6089, 6003, 6004
**Dishpro** 6002, 6089, 6004
**DX Antenna** 6140
**E Aichi** 6141
**Echostar** 6002, 6089, 6036, 6005, 6003, 6004, 6146
**Expressvu** 6002, 6004
**Fujitsu** 6133, 6134, 6135
**Fortec Star** 6123, 6023
**Fresat** 6014
**Funai** 6070
**GE** 6111
**General Instrument** 6032
**GOI** 6002, 6004
**Grundig** 6007, 6030
**Hirschmann** 6033
**Hisense** 6020
**Hitachi** 6038, 6049, 6132
**Houston** 6002
**HTS** 6002, 6004
**Hughes Network Systems** 6113, 6038, 6054, 6114, 6115, 6116
**Hyundai** 6016
**iLo** 6020
**Innova** 6059
**Jerrold** 6032, 6128, 6149, 6150, 6151, 6152, 6153, 6154, 6155, 6156, 6157
**JVC** 6002, 6003, 6004
**Kathrein** 6096
**Lava** 6053
**LG** 6047, 6018
**Marantz** 6102
**McIntosh** 6032
**Mitsubishi** 6038
**Motorola** 6032, 6042
**NEC** 6050, 6131
**Netsat** 6059
**Next Level** 6032
**nfusion** 6015
**Nokia** 6025, 6026, 6118, 6119, 6121
**Pace** 6035, 6005, 6030, 6031
**Panarex** 6016
**Panasonic** 6008, 6009, 6030, 6136, 6137, 6138
**Pansat** 6016, 6022
**Philips** 6002, 6113, 6038, 6054, 6060, 6059, 6102, 6103, 6030, 6114
**Primestar** 6032, 6147
**Proscan** 6110, 6111
**Proton** 6020
**RadioShack** 6002, 6111, 6032
**Radix** 6036
**RCA** 6002, 6110, 6111, 6113, 6109, 6061, 6114, 6142, 6144, 6148
**SA** 6124, 6126, 6158, 6159
**Saba** 6014
**Sagem** 6041, 6120
**Samsung** 6070, 6113, 6091, 6043, 6017, 6114, 6093
**Sanyo** 6046
**Sat Cruiser** 6015
**Schwaiger** 6066
**SEI** 6139
**Siemens** 6007, 6036
**SKY** 6042, 6059, 6030, 6031
**SM Electronic** 6011
**Smart** 6051
**Sonicview** 6055, 6107
**Sony** 6062, 6063, 6030, 6143
**Star Choice** 6032
**Star Trak** 6032
**TechniSat** 6033
**Thomson** 6110, 6111, 6014
**Tivo** 6113, 6114, 6115, 6116
**Toshiba** 6038, 6054, 6039, 6130
**TPS** 6041
**Triasat** 6033
**Ultrasat** 6021
**US Digital** 6020
**USDTV** 6020
**ViewSat** 6048
**Voom** 6032
**Zehnder** 6101
**Zenith** 6042, 6069, 6037, 6125, 6127, 6129

## Satellite Set Top Box (SAT/PVR Combination)

**Pioneer** 0126, 0128
**Bell ExpressVu** 6002, 6003
**DirecTV** 6070, 6110, 6062, 6113, 6060, 6059, 6114, 6115, 6116
**Dish Network System** 6002, 6089
**Dishpro** 6002, 6089
**Echostar** 6002, 6089, 6003
**Expressvu** 6002
**Hughes Network Systems** 6113, 6114, 6115, 6116
**JVC** 6003
**Motorola** 6032
**Philips** 6113, 6114
**Proscan** 6110
**Samsung** 6114
**Sonicview** 6055, 6107
**Sony** 6062
**Star Choice** 6032
**Tivo** 6113, 6114, 6115, 6116

## Cable Set Top Box

**Pioneer** 6028, 6029, 6095, 6099
**ABC** 6122
**Accuphase** 6122
**Amino** 6077, 6078
**Auna** 6082
**BCC** 6072
**Bell & Howell** 6122
**Bright House** 6074, 6029
**Cable One** 6074, 6029
**Cablevision** 6074, 6029
**Charter** 6074, 6029, 6058
**Cisco** 6029, 6028, 6083
**Comcast** 6074, 6029, 1982
**Cox** 6074, 6029
**Digeo** 6029, 6058
**Director** 6073
**Emerson** 6122
**Fosgate** 6072
**General Instrument** 6073, 6072, 6122
**Homecast** 6024
**i3 Micro** 6077
**Insight** 6074, 6073, 6029
**Jebsee** 6122
**Jerrold** 6073, 6072, 6122
**Knology** 6029
**Macab** 6040
**Mediacom** 6074, 6029
**Memorex** 6112
**Motorola** 6074, 6073, 6072, 6029, 6122, 6094
**MTS** 6094
**Myrio** 6077, 6078
**Noos** 6040
**Pace** 6074, 6029, 6028, 6106, 6083
**Panasonic** 6112, 6083
**Paragon** 6112
**Penney** 6112
**Philips** 6012
**Pulsar** 6112
**Quasar** 6112
**Regal** 6072
**Rogers** 6029
**Runco** 6112
**Samsung** 6095
**Scientific Atlanta** 6029, 6028, 6027, 6112
**Sejin** 6077
**Shaw** 6074
**Starcom** 6122
**Stargate** 6122
**Suddenlink** 6074, 6029
**Supercable** 6072
**Time Warner** 6074, 6029, 6058
**Tivo** 6076
**Toshiba** 6112
**United Cable** 6072, 6122
**US Electronics** 6072
**Videoway** 6112
**Zenith** 6112

## Cable Set Top Box (Cable/PVR Combination)

**Pioneer** 0127, 6029
**Amino** 6078
**Bright House** 6074, 6029
**Cable One** 6074, 6029
**Cablevision** 6074, 6029
**Charter** 6074, 6029, 6058
**Cisco** 6029, 6083
**Comcast** 6074, 6029, 6083, 6076
**Cox** 6074, 6029
**Digeo** 6081, 6058
**Homecast** 6024
**Insight** 6074, 6029
**Knology** 6029
**Mediacom** 6074, 6029
**Motorola** 6074, 6081
**Myrio** 6078
**Pace** 6029
**Panasonic** 6083
**Rogers** 6029
**Scientific Atlanta** 6029
**Shaw** 6074
**Suddenlink** 6074, 6029
**Supercable** 6072
**Time Warner** 6074, 6029, 6058
**Tivo** 6076

## CD

**Pioneer** 5065, 5066
**AKAI** 5043
**Asuka** 5045
**Denon** 5019
**Fisher** 5048
**Goldstar** 5040
**Hitachi** 5042
**Kenwood** 5020, 5021, 5031
**Luxman** 5049
**Marantz** 5033
**Onkyo** 5017, 5018, 5030, 5050
**Panasonic** 5036
**Philips** 5022, 5032, 5044
**RCA** 5013, 5029
**Roadstar** 5052
**Sharp** 5051
**Sony** 5012, 5023, 5026, 5027, 5028, 5039
**TEAC** 5015, 5016, 5034, 5035, 5037
**Technics** 5041
**Victor** 5014
**Yamaha** 5024, 5025, 5038, 5046, 5047

## CD-R

**Pioneer** 5067
**Philips** 5054
**Yamaha** 5055

## Laser Disc Player

**Pioneer** 5062, 5063

## Cassete Deck

**Pioneer** 5058, 5059, 5070

## Digital Tape

**Pioneer** 5069

## MD

**Pioneer** 5068

# Specifications

### Amplifier Section

**Continuous average power output of 110 watts* per channel, min., at 8 ohms, from 20 Hz to 20 000 Hz with no more than 0.08 %** total harmonic distortion.**

Continuous Power Output (20 Hz to 20 kHz, 8 Ω, 0.08 %)
- Front . . . . . 110 W + 110 W
- Center . . . . . 110 W
- Surround . . . . . 110 W + 110 W
- Surround back (Front height/wide) . . . . . 110 W + 110 W

Continuous Power Output (1 kHz, 6 Ω, 1.0 %)
- Front . . . . . 150 W + 150 W
- Center . . . . . 150 W
- Surround . . . . . 150 W + 150 W
- Surround back (Front height/wide) . . . . . 150 W + 150 W

Continuous Power Output (1 kHz, 8 Ω, 0.05 %, 1 ch driven) . . . . . 120 W per channel

Guaranteed speaker impedance . . . . . 16 Ω to 8 Ω, less than 8 Ω to 6 Ω (setting required)

** Measured pursuant to the Federal Trade Commission's Trade Regulation rule on Power Output Claims for Amplifiers*
*** Measured by Audio Spectrum Analyzer*

### Audio Section

Input (Sensitivity/Impedance)
- LINE . . . . . 350 mV/47 kΩ

Output (Level/Impedance)
- REC . . . . . 350 mV/2.2 kΩ

Signal-to-Noise Ratio (IHF, short circuited, A network, Pure Direct Mode)
- LINE . . . . . 103 dB

Frequency Response . . . . . 5 Hz to 100 000 Hz $^{+0}_{-3}$ dB (Pure Direct Mode)

### Tuner Section

Frequency Range (FM) . . . . . 87.5 MHz to 108 MHz
Antenna Input (FM) . . . . . 75 Ω unbalanced
Frequency Range (AM) . . . . . 531 kHz to 1602 kHz
Antenna (AM) . . . . . Loop antenna (balanced)

### Video Section

Signal level
- Composite Video . . . . . 1 Vp-p (75 Ω)
- Component Video . . . . . Y: 1.0 Vp-p (75 Ω), PB, PR: 0.7 Vp-p (75 Ω)

Corresponding maximum resolution
- Component Video . . . . . 1080p (1125p) (Video convert off)

### Digital In/Out Section

HDMI terminal . . . . . 19-pin (Not DVI)
HDMI output type . . . . . 5 V, 100 mA
USB terminal . . . . . USB2.0 Full Speed (Type A)
iPod terminal . . . . . USB, and Video (Composite)
SIRIUS antenna cable . . . . . 8-pin mini DIN cable
ADAPTER PORT terminal . . . . . 5 V, 100 mA

### Integrated Control Section

Control (SR) terminal . . . . . Ø 3.5 Mini-jack (MONO)
Control (IR) terminal . . . . . Ø 3.5 Mini-jack (MONO)
IR signal . . . . . High Active (High Level: 2.0 V)
12 V Trigger terminal (VSX-1325 only) . . . . . Ø 3.5 Mini-jack (MONO)
12 V Trigger output type (VSX-1325 only) . . . . . 12 V, Total 150 mA
RS-232C cable type . . . . . 9-pin, cross type, female-female
EXTENSION terminal . . . . . 5 V, 150 mA

### Network Section

LAN terminal . . . . . 10 BASE-T/100 BASE-TX

### Miscellaneous

Power requirements . . . . . AC 120 V, 60 Hz
Power consumption . . . . . 400 W
- In standby . . . . . 0.2 W (HDMI Setup – Control : OFF)
  0.3 W (HDMI Setup – Control : ON)

Dimensions . . . . . 420 mm (W) x 173 mm (H) x 433 mm (D) (16 $^{9}/_{16}$ in. (W) x 6 $^{13}/_{16}$ in. (H) x 17 $^{1}/_{16}$ in. (D))

Weight (without package)
- VSX-1325 . . . . . 13.4 kg (30 lb)
- VSX-1125 . . . . . 13.1 kg (29 lb)

### Number of Furnished Parts

MCACC Setup microphone (APM7009) . . . . . 1
Remote control unit (AXD7591) . . . . . 1
AAA size IEC R03 dry cell batteries . . . . . 2
iPod cable . . . . . 1
AM loop antenna . . . . . 1
FM wire antenna . . . . . 1
Power cord . . . . . 1
These operating instructions

**Note**

- Specifications and the design are subject to possible modifications without notice, due to improvements.

## Cleaning the unit

- Use a polishing cloth or dry cloth to wipe off dust and dirt.
- When the surface is dirty, wipe with a soft cloth dipped in some neutral cleanser diluted five or six times with water, and wrung out well, and then wipe again with a dry cloth. Do not use furniture wax or cleansers.
- Never use thinners, benzene, insecticide sprays or other chemicals on or near this unit, since these will corrode the surface.

## Our philosophy

Pioneer is dedicated to making your home theater listening experience as close as possible to the vision of the moviemakers and mastering engineers when they created the original soundtrack. We do this by focusing on three important steps:

**1 Designing with carefully selected components so as to transmit the original soundtrack accurately**

**2 Allowing for customized acoustic calibration according to any listening area**

**3 Tuning that transmits soul**

*This product includes FontAvenue® fonts licenced by NEC corporation. FontAvenue is a registered trademark of NEC Corporation*

*Dear Customer:*

Selecting fine audio equipment such as the unit you've just purchased is only the start of your musical enjoyment. Now it's time to consider how you can maximize the fun and excitement your equipment offers. This manufacturer and the Electronic Industries Association's Consumer Electronics Group want you to get the most out of your equipment by playing it at a safe level. One that lets the sound come through loud and clear without annoying blaring or distortion-and, most importantly, without affecting your sensitive hearing.

Sound can be deceiving. Over time your hearing "comfort level" adapts to higher volumes of sound. So what sounds "normal" can actually be loud and harmful to your hearing. Guard against this by setting your equipment at a safe level BEFORE your hearing adapts.

**To establish a safe level:**
- Start your volume control at a low setting.
- Slowly increase the sound until you can hear it comfortably and clearly, and without distortion.

**Once you have established a comfortable sound level:**
- Set the dial and leave it there.

Taking a minute to do this now will help to prevent hearing damage or loss in the future. After all, we want you listening for a lifetime.

### We Want You Listening For A Lifetime

Used wisely, your new sound equipment will provide a lifetime of fun and enjoyment. Since hearing damage from loud noise is often undetectable until it is too late, this manufacturer and the Electronic Industries Association's Consumer Electronics Group recommend you avoid prolonged exposure to excessive noise. This list of sound levels is included for your protection.

| Decibel Level | Example |
|---|---|
| 30 | Quiet library, soft whispers |
| 40 | Living room, refrigerator, bedroom away from traffic |
| 50 | Light traffic, normal conversation, quiet office |
| 60 | Air conditioner at 20 feet, sewing machine |
| 70 | Vacuum cleaner, hair dryer, noisy restaurant |
| 80 | Average city traffic, garbage disposals, alarm clock at two feet. |

THE FOLLOWING NOISES CAN BE DANGEROUS UNDER CONSTANT EXPOSURE

| | |
|---|---|
| 90 | Subway, motorcycle, truck traffic, lawn mower |
| 100 | Garbage truck, chain saw, pneumatic drill |
| 120 | Rock band concert in front of speakers, thunderclap |
| 140 | Gunshot blast, jet plane |
| 180 | Rocket launching pad |

Information courtesy of the Deafness Research Foundation.

S001_A1_En

PIONEER ELECTRONICS (USA) INC. PIONEER ELECTRONICS OF CANADA, INC.

## LIMITED WARRANTY

WARRANTY VALID ONLY IN COUNTRY OF PRODUCT PURCHASE

### WARRANTY

Pioneer Electronics (USA) Inc. (PUSA), and Pioneer Electronics Of Canada, Inc. (POC), warrant that products distributed by PUSA in the U.S.A., and by POC in Canada that fail to function properly under normal use due to a manufacturing defect when installed and operated according to the owner's manual enclosed with the unit will be repaired or replaced with a unit of comparable value, at the option of PUSA or POC, without charge to you for parts or actual repair work. Parts supplied under this warranty may be new or rebuilt at the option of PUSA or POC.

**THIS LIMITED WARRANTY APPLIES TO THE ORIGINAL OR ANY SUBSEQUENT OWNER OF THIS PIONEER PRODUCT DURING THE WARRANTY PERIOD PROVIDED THE PRODUCT WAS PURCHASED FROM AN AUTHORIZED PIONEER DISTRIBUTOR/DEALER IN THE U.S.A. OR CANADA. YOU WILL BE REQUIRED TO PROVIDE A SALES RECEIPT OR OTHER VALID PROOF OF PURCHASE SHOWING THE DATE OF ORIGINAL PURCHASE OR, IF RENTED, YOUR RENTAL CONTRACT SHOWING THE PLACE AND DATE OF FIRST RENTAL. IN THE EVENT SERVICE IS REQUIRED, THE PRODUCT MUST BE DELIVERED WITHIN THE WARRANTY PERIOD, TRANSPORTATION PREPAID, ONLY FROM WITHIN THE COUNTRY OF PURCHASE AS EXPLAINED IN THIS DOCUMENT. YOU WILL BE RESPONSIBLE FOR REMOVAL AND INSTALLATION OF THE PRODUCT. PUSA OR POC, AS APPROPRIATE, WILL PAY TO RETURN THE REPAIRED OR REPLACEMENT PRODUCT TO YOU WITHIN THE COUNTRY OF PURCHASE.**

### PRODUCT WARRANTY PERIOD

| | Parts | Labor |
|---|---|---|
| **Home Audio and Video** | **1 Year** | **1 Year** |
| **Microphones, Headphones, Phono Cartridges and Styluses** | **90 Days** | **90 Days** |

Shorter limited warranty periods apply to some models. Please refer to the limited warranty document enclosed with the product for a definitive statement of the warranty period. The warranty period for retail customers who rent the product commences upon the date product is first put into use (a) during the rental period or (b) retail sale, whichever occurs first.

### WHAT IS NOT COVERED

**IF THIS PRODUCT WAS PURCHASED FROM AN UNAUTHORIZED DISTRIBUTOR, THERE ARE NO WARRANTIES, EXPRESS OR IMPLIED, INCLUDING THE IMPLIED WARRANTY OF MERCHANTABILITY AND THE IMPLIED WARRANTY OF FITNESS FOR A PARTICULAR PURPOSE AND THIS PRODUCT IS SOLD STRICTLY "AS IS" AND "WITH ALL FAULTS".**

**PIONEER SHALL NOT BE LIABLE FOR ANY CONSEQUENTIAL AND/OR INCIDENTAL DAMAGES.**

**PIONEER DOES NOT WARRANT ANY PRODUCT LISTED ABOVE WHEN IT IS USED IN A TRADE OR BUSINESS OR IN ANY INDUSTRIAL OR COMMERCIAL APPLICATION.**

**THIS WARRANTY DOES NOT APPLY IF THE PRODUCT HAS BEEN SUBJECTED TO POWER IN EXCESS OF ITS PUBLISHED POWER RATING.**

**THIS WARRANTY DOES NOT COVER TELEVISION OR DISPLAY SCREENS DAMAGED BY STATIC, NON-MOVING, IMAGES APPLIED FOR LENGTHY PERIODS (BURN-IN).**

**THIS WARRANTY DOES NOT COVER THE CABINET OR ANY APPEARANCE ITEM, USER ATTACHED ANTENNA, ANY DAMAGE TO RECORDS OR RECORDING TAPES OR DISCS, ANY DAMAGE TO THE PRODUCT RESULTING FROM ALTERATIONS, MODIFICATIONS NOT AUTHORIZED IN WRITING BY PIONEER, ACCIDENT, MISUSE OR ABUSE, DAMAGE DUE TO LIGHTNING OR TO POWER SURGES, SUBSEQUENT DAMAGE FROM LEAKING, DAMAGE FROM INOPERATIVE BATTERIES, OR THE USE OF BATTERIES NOT CONFORMING TO THOSE SPECIFIED IN THE OWNER'S MANUAL.**

**THIS WARRANTY DOES NOT COVER THE COST OF PARTS OR LABOR WHICH WOULD BE OTHERWISE PROVIDED WITHOUT CHARGE UNDER THIS WARRANTY OBTAINED FROM ANY SOURCE OTHER THAN A PIONEER AUTHORIZED SERVICE COMPANY OR OTHER DESIGNATED LOCATION. THIS WARRANTY DOES NOT COVER DEFECTS OR DAMAGE CAUSED BY THE USE OF UNAUTHORIZED PARTS OR LABOR OR FROM IMPROPER MAINTENANCE.**

**ALTERED, DEFACED, OR REMOVED SERIAL NUMBERS VOID THIS ENTIRE WARRANTY**

### NO OTHER WARRANTIES

**IN THE U.S.A. - PIONEER LIMITS ITS OBLIGATIONS UNDER ANY IMPLIED WARRANTIES INCLUDING, BUT NOT LIMITED TO, THE IMPLIED WARRANTIES OF MERCHANTABILITY AND FITNESS FOR A PARTICULAR PURPOSE, TO A PERIOD NOT TO EXCEED THE WARRANTY PERIOD. NO WARRANTIES SHALL APPLY AFTER THE WARRANTY PERIOD. SOME STATES DO NOT ALLOW LIMITATIONS ON HOW LONG AN IMPLIED WARRANTY LASTS AND SOME STATES DO NOT ALLOW THE EXCLUSIONS OR LIMITATIONS OF INCIDENTAL OR CONSEQUENTIAL DAMAGES, SO THE ABOVE LIMITATIONS OR EXCLUSIONS MAY NOT APPLY TO YOU. THIS WARRANTY GIVES YOU SPECIFIC LEGAL RIGHTS AND YOU MAY HAVE OTHER RIGHTS WHICH MAY VARY FROM STATE TO STATE.**

**IN CANADA - EXCEPT AS EXPRESSLY PROVIDED HEREIN, THERE ARE NO REPRESENTATIONS, WARRANTIES, OBLIGATIONS OR CONDITIONS, IMPLIED, STATUTORY OR OTHERWISE, APPLICABLE TO THIS PRODUCT.**

### TO OBTAIN SERVICE

PUSA and POC have appointed a number of Authorized Service Companies throughout the U.S.A. and Canada should your product require service. To receive warranty service you need to present your sales receipt or, if rented, your rental contract showing place and date of original owner's transaction. If shipping the unit you will need to package it carefully and send it, transportation prepaid by a traceable, insured method, to an Authorized Service Company. Package the product using adequate padding material to prevent damage in transit. The original container is ideal for this purpose. Include your name, address and telephone number where you can be reached during business hours.

On all complaints and concerns in the U.S.A. call Customer Support at 1-800-421-1404, or, in Canada, call Customer Satisfaction at 1-877-283-5901.

IN THE U.S.A.
For hook-up and operation of your unit or to locate an Authorized Service Company, please call or write:

PIONEER ELECTRONICS SERVICE, INC.
P.O. BOX 1760
LONG BEACH, CALIFORNIA 90801
1-800-421-1404
http://www.pioneerelectronics.com

IN CANADA
For additional information on this warranty, please call or write:
CUSTOMER SATISFACTION GROUP
PIONEER ELECTRONICS OF CANADA, INC.
300 ALLSTATE PARKWAY
MARKHAM, ON L3R 0P2
(905) 479-4411
1-877-283-5901
http://www.pioneerelectronics.ca

### DISPUTE RESOLUTION

**IN THE U.S.A.** - Following our response to any initial request to Customer Support, should a dispute arise between you and Pioneer, Pioneer makes available its Complaint Resolution Program to resolve the dispute. The Complaint Resolution Program is available to you without charge. You are required to use the Complaint Resolution Program before you exercise any rights under, or seek any remedies, created by Title I of the Magnuson-Moss Warranty-Federal Trade Commission Improvement Act, 15 U.S.C. 2301 *et seq.*

To use the Complaint Resolution Program call 1-800-421-1404 and explain to the customer service representative the problem you are experiencing, steps you have taken to have the product repaired during the warranty period and the name of the authorized Distributor/Dealer from whom the Pioneer product was purchased. After the complaint has been explained to the representative, a resolution number will be issued. Within 40 days of receiving your complaint, Pioneer will investigate the dispute and will either: (1) respond to your complaint in writing informing you what action Pioneer will take, and in what time period, to resolve the dispute; or (2) respond to your complaint in writing informing you why it will not take any action.

**IN CANADA** - Call the Customer Satisfaction Manager at (905) 946-7446 to discuss your complaint and to obtain a prompt resolution.

RECORD THE PLACE AND DATE OF PURCHASE FOR FUTURE REFERENCE

Model No. _____ Serial No. _____ Purchase Date _____

Purchased From _____

KEEP THIS INFORMATION AND YOUR SALES RECEIPT IN A SAFE PLACE

To register your product, find the nearest authorized service location, to purchase replacement parts, operating instructions, or accessories, please go to one of following URLs :

Pour enregistrer votre produit, trouver le service après-vente agréé le plus proche et pour acheter des pièces de rechange, des modes d'emploi ou des accessoires, reportez-vous aux URL suivantes :

**In the USA/Aux Etats-Unis**

**http://www.pioneerelectronics.com**

**In Canada/Aux Canada**

**http://www.pioneerelectronics.ca**

S018_B1_EnFr

Published by Pioneer Corporation.
Copyright © 2010 Pioneer Corporation.
All rights reserved.

**PIONEER CORPORATION**
1-1, Shin-ogura, Saiwai-ku, Kawasaki-shi, Kanagawa 212-0031, Japan
**PIONEER ELECTRONICS (USA) INC.**
P.O. BOX 1540, Long Beach, California 90801-1540, U.S.A. TEL: (800) 421-1404
**PIONEER ELECTRONICS OF CANADA, INC.**
300 Allstate Parkway, Markham, Ontario L3R 0P2, Canada TEL: 1-877-283-5901, 905-479-4411
**PIONEER EUROPE NV**
Haven 1087, Keetberglaan 1, B-9120 Melsele, Belgium TEL: 03/570.05.11
**PIONEER ELECTRONICS ASIACENTRE PTE. LTD.**
253 Alexandra Road, #04-01, Singapore 159936 TEL: 65-6472-7555
**PIONEER ELECTRONICS AUSTRALIA PTY. LTD.**
178-184 Boundary Road, Braeside, Victoria 3195, Australia, TEL: (03) 9586-6300
**PIONEER ELECTRONICS DE MEXICO S.A. DE C.V.**
Blvd.Manuel Avila Camacho 138 10 piso Col.Lomas de Chapultepec, Mexico, D.F. 11000 TEL: 55-9178-4270
K002_B1_En

Printed in <ARB7440-B>