General Specifications

Amplifier Section

Rated Output Power (FTC) (North American)
With 8 ohm loads, both channels driven, from 20-20,000 Hz; rated 80 watts per channel minimum RMS power, with no more than 0.08% total harmonic distortion from 250 milliwatts to rated output.
Surround Mode Output Power (∗)
(6 ohms, 1 kHz THD 0.9%) 140 W per channel
∗ Reference output for each speakers.
Depending on the source and the listening mode settings, there may be no sound output.

Rated Output Power (IEC) (Others)
5 ch × 130 W at 6 ohms, 1 kHz, 1 ch driven of 1% THD

Maximum Effective Output Power (JEITA) (Asian and Australian)
5 ch × 160 W at 6 ohms, 1 kHz, 1 ch driven of 10% THD

Dynamic Power (∗)
∗ IEC60268-Short-term maximum output power
160 W (3 Ω, Front)
125 W (4 Ω, Front)
85 W (8 Ω, Front)

THD+N (Total Harmonic Distortion+Noise)
0.08% (20 Hz - 20,000 Hz, half power)

Input Sensitivity and Impedance (1 kHz 100 W/8 Ω)
200 mV/47 kΩ (LINE (Unbalance))
3.5 mV/47 kΩ (PHONO MM)

Rated RCA Output Level and Impedance
1 V/470 Ω (SUBWOOFER PRE OUT)

Phono Overload
70 mV (MM 1 kHz 0.5%)

Frequency Response
10 Hz - 100 kHz/+1 dB, –3 dB (Pure Direct)

Tone Control Characteristics
±10 dB, 90 Hz (BASS)
±10 dB, 7.5 kHz (TREBLE)

Signal to Noise Ratio
106 dB (IHF-A, LINE IN, SP OUT)
80 dB (IHF-A, PHONO IN, SP OUT)

Speaker Impedance

6 Ω - 16 Ω

Headphone Output Impedance

330 Ω

Headphone Rated Output

85 mW (32 Ω, 1 kHz, 10% THD)

Video Section

Signal level

1 Vp-p/75 Ω (Composite Video)

Tuner Section

FM Tuning Frequency Range

87.5 MHz - 107.9 MHz (North American)

87.5 MHz - 108.0 MHz, RDS (Others)

AM Tuning Frequency Range

530 kHz - 1710 kHz (North American)

522/530 kHz - 1611/1710 kHz (Others)

Preset Channel

40

Network Section

Ethernet LAN

10BASE-T/100BASE-TX

Wireless LAN

IEEE 802.11 a/b/g/n standard

(Wi-Fi® standard)

5 GHz/2.4 GHz band

BLUETOOTH Section

Communication system

BLUETOOTH Specification version 4.1+LE

Frequency band

2.4 GHz band

Modulation method

FHSS (Freq Hopping Spread Spectrum)

Compatible BLUETOOTH profiles

A2DP 1.2

AVRCP 1.3

HOGP-Host (Client)

HOGP-HID Device (Server)

HID Service (HIDS)

Supported Codecs
SBC
AAC
Transmission range (A2DP)
20 Hz - 20 kHz (Sampling frequency 44.1 kHz)
Maximum communication range
Line of sight approx. 15 m (*)
* The actual range will vary depending on factors such as obstacles between devices, magnetic fields around a microwave oven, static electricity, cordless phone, reception sensitivity, antenna's performance, operating system, software application, etc.

General

Power Supply
AC 120 V, 60 Hz (North American)
AC 220 - 240 V, 50/60 Hz (Others)
Power Consumption
380 W (North American)
390 W (Others)
0.1 W (Stand-by, North American)
0.15 W (Stand-by, Others)
45 W (No-sound)
4.9 W (HDMI Standby Through, North American)
5.1 W (HDMI Standby Through, Others)
2.4 W (Network Standby)
Dimensions (W × H × D)
435 mm × 173 mm × 370.5 mm
17-1/8" × 6-13/16" × 14-9/16"
Weight
9.0 kg (19.8 lbs.) (North American)
9.2 kg (20.3 lbs.) (Others)

HDMI

Input
IN1 (BD/DVD, HDCP2.2), IN2 (CBL/SAT, HDCP2.2), IN3 (STRM BOX, HDCP2.2), IN4 (GAME), IN5, IN6
Output
OUT
Supported
Deep Color, x.v.Color™, LipSync, Audio Return Channel, 3D, 4K 60Hz, CEC, Extended Colorimetry (sYCC601, Adobe RGB, Adobe YCC601), Content Type, HDR
Audio Format
Dolby TrueHD, Dolby Digital, Dolby Digital Plus, DTS, DTS-HD Master

Audio, DTS-HD High Resolution Audio, DTS 96/24, DTS-HD Express, DSD, PCM

Maximum Video Resolution

4k 60 Hz (YCbCr 4:4:4)

Video Inputs

Composite

IN1 (BD/DVD), IN2 (CBL/SAT)

Compatible input resolutions

HDMI input

4K, 1080p/24, 1080p, 1080i, 720p, 480p/576p

Composite input

480i/576i

- The output from the HDMI OUT jack to the TV is the same resolution as the input. When using a TV that supports 4K, 1080p HDMI video signals can also be output as 4K.

Audio Inputs

Digital

OPTICAL (TV)

COAXIAL (CD)

Analog

BD/DVD, CBL/SAT, PHONO, AUX (front)

Audio Outputs

Analog

2 SUBWOOFER PRE OUT

Speaker Outputs

FRONT L/R, CENTER, SURROUND L/R

(North American models are banana plug ready)

Phones

PHONES (Front, ø 6.3 mm, 1/4")

Others

Setup Mic : 1 (Front)

USB : 1 (Ver. 2.0, 5 V/1 A)

Ethernet : 1

Power consumption in standby mode

- In the following cases, the power consumption in standby mode may reach up to a maximum of 12 W:
  - When "Network Standby" is set to "On"
  - When "HDMI CEC" is set to "On"
  - When "HDMI Standby Through" is set to other than "Off"
  - When "Bluetooth Wakeup" is set to "On"
  - When "USB Power Out at Standby" is set to "On"

Specifications and features are subject to change without notice.

About HDMI

Compatible functions

HDMI (High Definition Multimedia Interface) is a digital interface standard for connecting TVs, projectors, Blu-ray Disc/DVD players, set-top boxes, and other video components. Until now, several separate video and audio cables have been required to connect AV components. With HDMI, a single cable can carry control signals, digital video, and digital audio (2 ch PCM, multichannel digital audio, and multichannel PCM).

HDMI CEC functionality:
By connecting devices and HDMI cables that comply with the CEC (Consumer Electronics Control) specification of the HDMI standard, a variety of linked operation become possible between devices. You can enjoy features such as linking input switching with the input selector and players, control volume using the remote controller of the TV, and automatically switching this unit to standby when the TV is turned off.
The unit is designed to link with products that comply with the CEC standard, and that linked operation is not always guaranteed with all CEC devices. For linked functions to work properly, do not connect more CEC-compliant components than the quantities specified below, to the HDMI jack.

- Blu-ray Disc/DVD players: up to 3 units
- Blu-ray Disc/DVD recorders: up to 3 units
- Cable TV tuner, terrestrial digital tuner, and satellite broadcasting tuner: up to 4 units

Operation has been confirmed on the following devices from other manufacturers: (As of February 2016)
Toshiba brand televisions; Sharp brand televisions; Toshiba brand players and recorders; Sharp brand players and recorders (when used with a Sharp brand television)

ARC（Audio Return Channel）:
By connection a TV that supports ARC with a single HDMI cable, you can not only output the audio and video from this unit to the TV, but also input the audio from the TV to this unit.

HDMI Standby Through:
Even if this unit is in standby, the input signals from AV components are transmitted to the TV.

Deep Color:
By connecting devices supporting Deep Color, video signals input from the devices can be reproduced on the TV with even more colors.

x.v.Color™:
This technology realizes even more realistic colors by broadening the color gamut.

3D:
You can transmit 3D video signals from AV components to the TV.

4K:
This unit supports 4K (3840×2160p) and 4K SMPTE (4096×2160p) video signals.

LipSync:
This setting automatically corrects any desynchronization between the video and audio signals based on data from the HDMI LipSync compatible TV.

Copyright Protection:
The unit supports Revision 1.4 and Revision 2.2 (HDMI OUT and HDMI IN1 to 3 only) of the HDCP (High-bandwidth Digital Content Protection), a copy-protection system for digital video signals. Other devices connected to the unit must also support HDCP.

Supported Audio Formats

2 ch linear PCM:
32 kHz, 44.1 kHz, 48 kHz, 88.2 kHz, 96 kHz, 176.4 kHz, 192 kHz, 16/20/24 bit

Multi-channel linear PCM:
Maximum 5.1 channels, 32 kHz, 44.1 kHz, 48 kHz, 88.2 kHz, 96 kHz, 176.4 kHz, 192 kHz, 16/20/24 bit

Bitstream:
Dolby Digital, Dolby Digital Plus, Dolby TrueHD, DTS, DTS-HD High Resolution Audio, DTS-HD Master Audio

DSD:
Supported sampling rates: 2.8 MHz

Your Blu-ray Disc/DVD player must also support HDMI output of the above audio formats.

Supported resolutions

HDMI IN1 to IN3:
- Copyright protection technology: HDCP1.4/HDCP2.2

- Color space (Color Depth):
  - 720×480i 60Hz, 720×576i 50Hz, 720×480p 60Hz, 720×576p 50Hz, 1920×1080i 50/60Hz, 1280×720p 24/25/30/50/60Hz, 1680×720p 24/25/30/50/60Hz, 1920×1080p 24/25/30/50/60Hz, 2560×1080p 24/25/30/50/60Hz, 4K (3840×2160p) 24/25/30Hz, 4K SMPTE (4096×2160p) 24/25/30Hz : RGB/YCbCr4:4:4 (8/10/12 bit), YCbCr4:2:2 (12 bit)
  - 4K (3840×2160p) 50/60Hz, 4K SMPTE (4096×2160p) 50/60Hz : RGB/YCbCr4:4:4 (8 bit), YCbCr4:2:2 (12 bit), YCbCr4:2:0 (8/10/12 bit)

HDMI IN4 to IN6:
- Copyright protection technology: HDCP1.4
- Color space (Color Depth):
  - 720×480i 60Hz, 720×576i 50Hz, 720×480p 60Hz, 720×576p 50Hz, 1920×1080i 50/60Hz, 1280×720p 24/25/30/50/60Hz, 1680×720p 24/25/30/50/60Hz, 1920×1080p 24/25/30/50/60Hz, 2560×1080p 24/25/30/50/60Hz : RGB/YCbCr4:4:4 (8/10/12 bit), YCbCr4:2:2 (12 bit)
  - 4K (3840×2160p) 24/25/30Hz, 4K SMPTE (4096×2160p) 24/25/30Hz : RGB/YCbCr4:4:4 (8 bit), YCbCr4:2:2 (12 bit)
  - 4K (3840×2160p) 50/60Hz, 4K SMPTE (4096×2160p) 50/60Hz : YCbCr4:2:0 (8 bit)

System Setup

The unit allows you to configure advanced settings to provide you with an even better experience.

Operation:
Use the on-screen displays (OSD) that appear on the TV to make the settings.
Press ⌂ on the remote controller to display the Home screen, then select System Setup with the cursors on the remote controller and press ENTER.

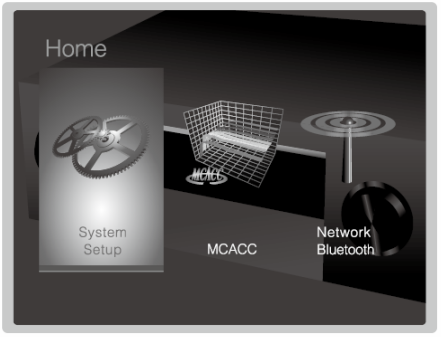

Select the item with the cursor ▲/▼/◀/▶ buttons of the remote controller and press ENTER to confirm your selection.
Use the cursors ◀/▶ to change the default values.

- To return to the previous screen, press ⮌.
- To exit the settings, press ⌂.

Input/Output Assign

Make settings related to output to the TV, change the settings for jack allocations to the various input selectors, and set the feature for displaying operations on the TV (OSD), etc.

TV Out/OSD

1080p -> 4K Upscaling

Default Value: Off

When using a TV that supports 4K, video signals input at 1080p can be automatically upscaled to 4K for output.
"Off": Do not use this function
"Auto": Use this function

- Select "Off" if your TV does not support 4K.

Super Resolution
Default Value: (2)

When you have set "1080p -> 4K Upscaling" to "Auto", you can select the degree of video signal correction from "Off" and between "1" (weak) and "3" (strong).

OSD Language
Default Value: English

Select the on-screen display language.
(North American models) English, German, French, Spanish, Italian, Dutch, Swedish
(European, Australian and Asian models) English, German, French, Spanish, Italian, Dutch, Swedish, Russian, Chinese.

Impose OSD
Default Value: On

Set whether or not to display the information on the TV when the volume is adjusted or input is changed, for example.
"On": OSD displayed on the TV.
"Off": OSD not displayed on the TV.

- OSD may not be displayed depending on the input signal even if "On" is selected. If the operation screen is not displayed, change the resolution of the connected device.

Screen Saver
Default Value: 3 minutes

Set the time to start the screen saver.
Select a value from "3 minutes", "5 minutes", "10 minutes" and "Off".

HDMI Input

You can change input assignment between the input selectors and HDMI IN jacks.

BD/DVD
Default Value: HDMI 1（HDCP 2.2）

"HDMI 1 (HDCP 2.2)" to "HDMI 4": Assign a desired HDMI IN jack to the BD/DVD input selector. If you do not assign a jack, select "-----". To select an HDMI IN jack already assigned to another input selector, change the input selector setting to "-----" first.

CBL/SAT
Default Value: HDMI 2（HDCP 2.2）

"HDMI 1 (HDCP 2.2)" to "HDMI 4": Assign a desired HDMI IN jack to the CBL/SAT input selector. If you do not assign a jack, select "-----". To select an HDMI IN jack already assigned to another input selector, change the input selector setting to "-----" first.

- GAME
  Default Value: HDMI 4

  "HDMI 1 (HDCP 2.2)" to "HDMI 4": Assign a desired HDMI IN jack to the GAME input selector. If you do not assign a jack, select "-----". To select an HDMI IN jack already assigned to another input selector, change the input selector setting to "-----" first.

- STRM BOX
  Default Value: HDMI 3（HDCP 2.2）

  "HDMI 1 (HDCP 2.2)" to "HDMI 4": Assign a desired HDMI IN jack to the STRM BOX input selector. If you do not assign a jack, select "-----". To select an HDMI IN jack already assigned to another input selector, change the input selector setting to "-----" first.

Video Input

You can change input assignment between the input selectors and the VIDEO IN 1 and 2 jacks. If you do not assign a jack, select "-----".

- BD/DVD
  Default Value: VIDEO 1

  "VIDEO 1", "VIDEO 2": Assign a desired VIDEO IN jack to the BD/DVD input selector.

- CBL/SAT
  Default Value: VIDEO 2

  "VIDEO 1", "VIDEO 2": Assign a desired VIDEO IN jack to the CBL/SAT input selector.

- GAME
  Default Value: -----

  "VIDEO 1", "VIDEO 2": Assign a desired VIDEO IN jack to the GAME input selector.

- STRM BOX
  Default Value: -----

  "VIDEO 1", "VIDEO 2": Assign a desired VIDEO IN jack to the STRM BOX input selector.

Digital Audio Input

You can change input assignment between the input selectors and DIGITAL IN COAXIAL/OPTICAL jacks. If you do not assign a jack, select "-----".

- BD/DVD
  Default Value: -----

  "COAXIAL", "OPTICAL ": Assign a desired DIGITAL IN jack to the BD/DVD input selector.

- CBL/SAT
  Default Value: -----

  "COAXIAL", "OPTICAL ": Assign a desired DIGITAL IN jack to the CBL/SAT input selector.

- GAME
  Default Value: -----

  "COAXIAL", "OPTICAL ": Assign a desired DIGITAL IN jack to the GAME input selector.

- STRM BOX
  Default Value: -----

  "COAXIAL", "OPTICAL ": Assign a desired DIGITAL IN jack to the STRM BOX input selector.

- CD
  Default Value: COAXIAL

  "COAXIAL", "OPTICAL ": Assign a desired DIGITAL IN jack to the CD input selector.

- TV
  Default Value: OPTICAL

  "COAXIAL", "OPTICAL ": Assign a desired DIGITAL IN jack to the TV input selector.

- Supported sampling rates for PCM signals (stereo, mono) from a digital input are 32kHz, 44.1kHz, 48kHz, 88.2kHz, 96kHz/16bit, 20bit, and 24bit.

Analog Audio Input

You can change input assignment between the input selectors and AUDIO IN jacks. If you do not assign a jack, select "-----".

- BD/DVD
  Default Value: AUDIO 1

"AUDIO 1" to "AUDIO 2": Assign a desired AUDIO IN jack to the BD/DVD input selector.

- CBL/SAT
  Default Value: AUDIO 2

  "AUDIO 1" to "AUDIO 2": Assign a desired AUDIO IN jack to the CBL/SAT input selector.

- GAME
  Default Value: -----

  "AUDIO 1" to "AUDIO 2": Assign a desired AUDIO IN jack to the GAME input selector.

- STRM BOX
  Default Value: -----

  "AUDIO 1" to "AUDIO 2": Assign a desired AUDIO IN jack to the STRM BOX input selector.

- CD
  Default Value: -----

  "AUDIO 1" to "AUDIO 2": Assign a desired AUDIO IN jack to the CD input selector.

- TV
  Default Value: -----

  "AUDIO 1" to "AUDIO 2": Assign a desired AUDIO IN jack to the TV input selector.

Input Skip

You can skip inputs to which nothing is connected when selecting them with the INPUT SELECTOR dial on the main unit or with the ◄ / ► input selectors on the remote controller.

- BD/DVD
  Default Value: Use

  Set whether to skip the BD/DVD input selector. Select "Skip" to skip this input.

- CBL/SAT
  Default Value: Use

  Set whether to skip the CBL/SAT input selector. Select "Skip" to skip this input.

GAME
Default Value: Use

Set whether to skip the GAME input selector. Select "Skip" to skip this input.

STRM BOX
Default Value: Use

Set whether to skip the STRM BOX input selector. Select "Skip" to skip this input.

HDMI 5
Default Value: Use

Set whether to skip the HDMI 5 input selector. Select "Skip" to skip this input.

HDMI 6
Default Value: Use

Set whether to skip the HDMI 6 input selector. Select "Skip" to skip this input.

AUX
Default Value: Use

Set whether to skip the AUX input selector. Select "Skip" to skip this input.

CD
Default Value: Use

Set whether to skip the CD input selector. Select "Skip" to skip this input.

TV
Default Value: Use

Set whether to skip the TV input selector. Select "Skip" to skip this input.

PHONO
Default Value: Use

Set whether to skip the PHONO input selector. Select "Skip" to skip this input.

TUNER
Default Value: Use

Set whether to skip the TUNER input selector. Select "Skip" to skip this

input.

NET
Default Value: Use

Set whether to skip the NET input selector. Select "Skip" to skip this input.

USB
Default Value: Use

Set whether to skip the USB input selector. Select "Skip" to skip this input.

BT AUDIO
Default Value: Use

Set whether to skip the BT AUDIO input selector. Select "Skip" to skip this input.

Speaker

You can make changes to the connection environment of the speakers and change the volume level. Settings are automatically configured if you use Full Auto MCACC. This setting cannot be selected if headphones are connected or audio is output from the speakers of the TV.

Configuration

Speaker Channels
Default Value: 5.1 ch

Select "2.1 ch", "3.1 ch", "4.1 ch" or "5.1 ch" to suit the number of speaker channels connected.

Subwoofer
Default Value: Yes

Set whether a subwoofer is connected or not.
"Yes": When subwoofer is connected
"No": When subwoofer is not connected

Crossover

Front
Default Value: Small

Set the low range capabilities for each channel by setting either small or large.

"Small": For small speakers whose low range capabilities may be limited
"Large": For full-range speakers with sufficient low range capabilities

- If "System Setup" - "Speaker" - "Configuration" - "Subwoofer" is set to "No", "Front" will be fixed to "Large" and the low pitched range of the other channels will be output from the front speakers. Refer to the instruction manual of your speakers to make the setting.

Center

Default Value: Small

Set the low range capabilities for each channel by setting either small or large.
"Small": For small speakers whose low range capabilities may be limited
"Large": For full-range speakers with sufficient low range capabilities

- When "Front" is set to "Small", this is set to "Small".
- If an item cannot be selected even though connection is correct, check that the settings in "System Setup" - "Speaker" - "Configuration" - "Speaker Channels" matches the number of connected channels.

Surround

Default Value: Small

Set the low range capabilities for each channel by setting either small or large.
"Small": For small speakers whose low range capabilities may be limited
"Large": For full-range speakers with sufficient low range capabilities

- When "Front" is set to "Small", this is set to "Small".
- If an item cannot be selected even though connection is correct, check that the settings in "System Setup" - "Speaker" - "Configuration" - "Speaker Channels" matches the number of connected channels.

Crossover

Default Value: 80Hz

When there are speakers that have been set to "Small", set the Hz under which you would like other speakers to play bass, and also set Hz under which you would like the LFE (low frequency effect) to play the bass.
The value from "50Hz" to "200Hz" can be set.

Double Bass

Default Value: Off

This can be selected only when "System Setup" - "Speaker" -

"Configuration" - "Subwoofer" is set to "Yes" and "Front" is set to "Large".
Boost bass output by feeding bass sounds from the front left and right, and center speakers to the subwoofer.
"On": Bass output will be boosted
"Off": Bass output will not be boosted

- The setting will not automatically be configured even if you performed Full Auto MCACC.

Distance

Set the distance from each speaker to the listening position.

- Front Left
  Default Value: 10.0ft/3.00m

  Specify the distance between each speaker and the listening position.
- Center
  Default Value: 10.0ft/3.00m

  Specify the distance between each speaker and the listening position.
- Front Right
  Default Value: 10.0ft/3.00m

  Specify the distance between each speaker and the listening position.
- Surround Right
  Default Value: 10.0ft/3.00m

  Specify the distance between each speaker and the listening position.
- Surround Left
  Default Value: 10.0ft/3.00m

  Specify the distance between each speaker and the listening position.
- Subwoofer
  Default Value: 10.0ft/3.00m

  Specify the distance between each speaker and the listening position.

- Default values vary depending on the regions.
- Distance units can be switched by pressing MODE on the remote controller. When the unit is set as feet, you can set between 0.1 ft and 30.0 ft in increments of 0.1ft. When the unit is set as meters, you can set between 0.03 m and 9.00 m in increments of 0.03 m.

Channel Level

Front Left
Default Value: 0.0 dB

Select a value between "－12.0 dB" and "＋12.0 dB" (in 0.5 dB increments). A test tone will be output each time you change the value. Select the desired level.

Center
Default Value: 0.0 dB

Select a value between "－12.0 dB" and "＋12.0 dB" (in 0.5 dB increments). A test tone will be output each time you change the value. Select the desired level.

Front Right
Default Value: 0.0 dB

Select a value between "－12.0 dB" and "＋12.0 dB" (in 0.5 dB increments). A test tone will be output each time you change the value. Select the desired level.

Surround Right
Default Value: 0.0 dB

Select a value between "－12.0 dB" and "＋12.0 dB" (in 0.5 dB increments). A test tone will be output each time you change the value. Select the desired level.

Surround Left
Default Value: 0.0 dB

Select a value between "－12.0 dB" and "＋12.0 dB" (in 0.5 dB increments). A test tone will be output each time you change the value. Select the desired level.

Subwoofer
Default Value: 0.0 dB

Select a value between "－15.0 dB" and "＋12.0 dB" (in 0.5 dB increments). A test tone will be output each time you change the value. Select the desired level.

Audio Adjust

Make advanced settings such as those related to multiplex audio or those related to the volume of this unit.

Dual Mono/Mono

Dual Mono
Default Value: Main

Set the audio channel or language to be output when playing multiplex audio or multilingual TV broadcasts etc.
"Main": Main channel only
"Sub": Sub channel only
"Main/Sub": Main and sub channels will be output at the same time.

- If multiplex audio is being played, "1＋1" will be displayed when *i* on the remote controller is pressed.

Mono Input Channel
Default Value: Left+Right

Set the input channel to use for playing any 2 ch digital source such as Dolby Digital, or 2 ch analog/PCM source in the Mono listening mode.
"Left": Left channel only
"Right": Right channel only
"Left + Right": Left and right channels

Dolby

Loudness Management
Default Value: On

When playing Dolby TrueHD, enable the dialog normalization function which keeps the volume of dialog at a certain level. Note that when this setting is Off, the DRC function that allows you to enjoy surround at low volumes is fixed to off when playing Dolby Digital Plus/Dolby TrueHD.
"On": Use this function
"Off": Do not use this function

Volume

Mute Level
Default Value: －∞ dB

Set the volume lowered from the listening volume when muting is on. Select a value from "－∞ dB", "－40 dB", and "－20 dB".

Volume Limit
Default Value: Off

Set the maximum value to avoid too high volume. Select "Off" or a value between "－32 dB" and "＋17 dB".

Power On Level
Default Value: Last

Set the volume level of when the power is turned on. Select a value from "Last" (volume before entering standby mode), "−∞ dB", and "−81.5 dB" to "+18.0 dB".

- You cannot set a higher value than that of "Volume Limit".

☐ Headphone Level
Default Value: 0.0 dB

Adjust the output level of the headphones. Select a value between "−12.0 dB" and "+12.0 dB".

Source

Make settings for input sources, such as volume difference adjustments for each input selector for the connected equipment.

■ Input Volume Absorber

Adjust the volume level difference between the devices connected to the unit. Select the input selector to configure.

☐ Input Volume Absorber
Default Value: 0.0 dB

Select a value between "−12.0 dB" and "+12.0 dB". Set a negative value if the volume of the target device is larger than the others and a positive value if smaller. To check the audio, start playback of the connected device.

■ Name Edit

Set an easy name to each input. The set name will be shown on the main unit display. Select the input selector to configure.

☐ Name Edit
Default Value: Input name

1. Select a character or symbol with the cursors and press ENTER. Repeat it to input 10 or less characters.
   "A/a": Switches between upper and lower cases. (Pressing MODE on the remote controller also toggles between upper and lower cases)
   "←" "→": Moves the cursor to the arrow direction.
   "⌫": Removes a character on the left of the cursor.
   "␣": Enters a space.
   - Pressing CLEAR on the remote controller will remove all the input characters.
2. After inputting, select "OK" with the cursors and press ENTER.

The input name will be saved.

- To name a preset radio station, press TUNER on the remote controller, select AM/FM and select the preset number.
- This cannot be set if the "NET" "USB" or "BT AUDIO" input is selected.

Audio Select

Select the priority for input selection when multiple audio sources are connected to one input selector, such as connections to both the "BD/DVD" HDMI IN jack and the "BD/DVD" AUDIO IN jack. The setting can be separately set to each input selector. Select the input selector to configure.

Audio Select

Default Value: BD/DVD: HDMI CBL/SAT: HDMI GAME: HDMI STRMBOX: HDMI CD: COAXIAL TV: OPTICAL PHONO: Analog

"ARC": When giving priority to input signal from ARC compatible TV.
- The setting can be selected only when "System Setup" - "Hardware" - "HDMI" - "Audio Return Channel" is set to "Auto" and also the "TV" input is selected.

"HDMI": When giving priority to input signal from HDMI IN jacks
- The setting can be selected only when the input is assigned to the HDMI jack in the "System Setup" - "Input/Output Assign" - "HDMI Input" setting.

"COAXIAL": When giving priority to input signal from DIGITIAL IN COAXIAL jacks
- The setting can be selected only when the input is assigned to the COAXIAL jack in the "System Setup" - "Input/Output Assign" - "Digital Audio Input" setting.

"OPTICAL": When giving priority to input signal from DIGITIAL IN OPTICAL jacks
- The setting can be selected only when the input is assigned to the OPTICAL jack in the "System Setup" - "Input/Output Assign" - "Digital Audio Input" setting.

"Analog": To always output analog audio independently of the input signal
- The setting can be selected only when the input is assigned to the AUDIO IN jack in the "System Setup" - "Input/Output Assign" - "Analog Audio Input" setting.

Fixed PCM

Default Value: Off

Select whether to fix input signals to PCM (except multi-channel PCM) when you have selected "HDMI", "COAXIAL", or "OPTICAL" in the "Audio Select" setting. Set this item to "On" if noise is produced or truncation occurs at the beginning of a track when playing PCM

sources. Select "Off" normally.
- Changing "Audio Select" changes the setting to "Off".

- The setting cannot be changed when "TUNER", "NET", "USB", or "BT AUDIO" input is selected.

Hardware

Make settings related to the HDMI CEC, HDMI Standby Through, ARC features, settings related to power management of the unit, such as Auto Standby and Network Standby.

HDMI

HDMI CEC

Default Value: Off

Setting to "On" enables the input selection link and other link functions with HDMI connected CEC compliant device.
"On": Use this function
"Off": Do not use this function
When changing this setting, turn off and then on again the power of all connected components.

- Depending on the TV set, a link may need to be configured on the TV.
- Setting to "On" and closing the on-screen menu displays the name of the CEC-compatible components and "CEC On" on the display.
- Power consumption in standby mode may increase if "On" is set. (Depending on the TV status, the unit will enter the normal standby mode.)
- If you operate the MASTER VOLUME dial on the main unit when this setting is "On" and audio is output from the TV speakers, audio will be output also from the speakers connected to the unit. If you want to output from only either of them, change the unit or TV settings, or reduce the volume of the unit.
- If abnormal operation occurs when you set the setting to "On", set it to "Off".
- When connecting a non-CEC compatible component, or when you are not sure whether it is compatible, set the setting to "Off".

HDMI Standby Through

Default Value: Off

When this is set to anything other than "Off", you can play the video and audio of an HDMI connected player on the TV even if the unit is in standby mode. Only "Auto" and "Auto(Eco)" can be selected if "HDMI CEC" is set to "On". If you select anything else, set "HDMI CEC" to

"Off".

- Power consumption in standby mode increases if set to anything other than "Off".

"BD/DVD", "CBL/SAT", "GAME", "STRM BOX", "HDMI 5", "HDMI 6": For example, if you select "BD/DVD", you can play the equipment connected to the "BD/DVD" jack on the TV even if the unit is in standby mode. Select this setting if you have decided which player to use with this function.
"Last": You can play the video and audio of the input selected immediately prior to the unit being switched to standby on the TV.
"Auto", "Auto (Eco)": Select one of these settings when you have connected equipment that conforms to the CEC standard. You can play the video and audio of the input selected on the TV, irrespective of what input was selected immediately prior to the unit being switched to standby, using the CEC link function.

- To play players on the TV that do not conform to the CEC standard, you will need to turn the unit on and switch to the relevant input.
- When using TV that complies with the CEC standard, you can reduce the power consumption in standby mode by selecting "Auto (Eco)".

☐ Audio TV Out

Default Value: Off

You can enjoy audio through the speakers of the TV while this unit is on.
"On": Use this function
"Off": Do not use this function

- The setting is fixed to "Auto" if "HDMI CEC" is set to "On". If you change this setting, set "HDMI CEC" to "Off".
- Listening mode cannot be changed while "Audio TV Out" is set to "On" and audio is being output through the speakers of the TV.
- Depending on your TV set or input signal of the component, audio may not output through the speakers of the TV even if this setting is set to "On". In such case, audio is output from the speakers of the unit.
- If you operate the MASTER VOLUME dial on this unit when audio that is being input through this unit for output from the TV speakers, audio is output from this unit. If you do not want to output audio from the unit, change the unit or TV settings, or reduce the volume of the unit.

☐ Audio Return Channel

Default Value: (Auto) (∗)

You can enjoy sound of the HDMI connected ARC compatible TV through the speakers connected to the unit.

∗ To use this function, set "HDMI CEC" to "On" in advance.
"Auto": When enjoying the TV sound through the speakers connected to the unit
"Off": When not using the ARC function

Auto Delay
Default Value: On

This setting automatically corrects any desynchronization between the video and audio signals based on data from the HDMI LipSync compatible TV.
"On": Automatic correction will be enabled
"Off": Automatic correction will be disabled

Power Management

Sleep Timer
Default Value: Off

Allows the unit to enter standby automatically when the specified time elapses. Select a value from "30 minutes", "60 minutes", and "90 minutes".
"Off": Does not turn the unit to standby automatically

Auto Standby
Default Value: On/Off

This setting places the unit on standby automatically after 20 minutes of inactivity without any video or audio input. (When "USB Power Out at Standby" or "Network Standby" is on, this becomes the HYBRID STANDBY mode which reduces the increase in power consumption to a minimum.)
"On": The unit will automatically enter standby mode ("AUTO STBY" will light.)
"Off": The unit will not automatically enter standby mode
- "Auto Standby" is displayed on the display and TV screen 30 seconds before the Auto Standby comes on.

Auto Standby in HDMI Standby Through
Default Value: (Off)

Enable or disable "Auto Standby" while "HDMI Standby Through" is on.
"On": The setting will be enabled
"Off": The setting will be disabled
- This setting cannot be set to "On" if "Auto Standby" is set to "Off".

USB Power Out at Standby
Default Value: Off

Devices connected to the USB port are supplied with electricity even when this unit is in standby mode when this function is "On".

- When using this feature, power consumption increases even when the unit is on standby, however, the increase in power consumption is kept to a minimum by automatically entering the HYBRID STANDBY mode, where only essential circuits are operating.

☐ Network Standby
Default Value: On

When this feature is turned "On", you can turn on the power of the unit via the network using an application such as iControlAV5 that can control this unit.

- When "Network Standby" is used, the power consumption increases even when the unit is on standby. However, the increase in power consumption is kept to a minimum by automatically entering the HYBRID STANDBY mode, where only the essential circuit is operating.
- "Network Standby", which suppresses power consumption, may be disabled when the network connection is lost. Use the power button on the remote controller or main unit to turn the unit on if this happens.

☐ Bluetooth Wakeup
Default Value: Off

This function wakes up the unit on standby by connecting a BLUETOOTH enabled device.
"On": Use this function
"Off": Do not use this function

- Setting to "On" increases the power consumption even when the unit is on standby. However, the increase in power consumption is kept to a minimum by automatically entering the HYBRID STANDBY mode, where only the essential circuit is operating.
- This setting is fixed to "Off" if "Network/Bluetooth" - "Bluetooth" - "Auto Input Change" is set to "Off".

- Wait for a while if "Network Standby" and "Bluetooth Wakeup" cannot be selected. It will appear when the network feature is started.

Miscellaneous

Change the frequency step for the tuner, update the firmware, and perform Initial Setup, etc.

■ Tuner

☐ AM/FM Frequency Step (North American models)

Default Value: 10kHz/0.2MHz

Select a frequency step depending on your area of residence.
Select "10kHz/0.2MHz" or "9kHz/0.05MHz".

- When this setting is changed, all radio presets are deleted.

AM Frequency Step (European, Australian and Asian models)

Default Value: 9kHz

Select a frequency step depending on your area of residence.
Select "10kHz" or "9kHz".

- When this setting is changed, all radio presets are deleted.

Remote ID

Remote ID

Default Value: 1

Select an ID for the unit's remote controller from "1", "2", and "3" to prevent interference between the unit and other Pioneer components that are installed in the same room. After changing the ID on the main unit, change the ID on the remote controller accordingly with the following procedure.
While holding down MODE, press the following buttons for about 3 seconds.

- To change the remote controller ID to "1": ⏮
  (The remote indicator flashes once.)
- To change the remote controller ID to "2": ⏯
  (The remote indicator flashes twice.)
- To change the remote controller ID to "3": ⏭
  (The remote indicator flashes three times.)

Firmware Update

Update Notice

Default Value: Enable

Availability of a firmware update will be notified via network.
"Enable": Notify updates
"Disable": Do not notify updates

Version

Default Value: -

The current firmware version will be displayed.

Update via NET

Default Value: -

Press ENTER to select when you want to update the firmware via network.

- You will not be able to select this setting if you do not have Internet access or there is nothing to update.

Update via USB

Default Value: -

Press ENTER to select when you want to update the firmware via USB.

- You will not be able to select this setting if a USB storage device is not connected or there is nothing to update in the USB storage device.

- Wait for a while if "Firmware Update" cannot be selected. It will appear when the network feature is started.

Initial Setup

You can make the initial setup from the setup menu.

- Wait for a while if "Initial Setup" cannot be selected. It will appear when the network feature is started.

Lock

Setup Parameter

Default Value: Unlocked

Lock the Setup menu to protect the settings.
"Locked": The menu is locked.
"Unlocked": The menu is unlocked.

MCACC

Setup the speakers automatically or make desired changes to the equalizer. You can also check the values set currently for each speaker setting.

Operation:
Use the on-screen displays (OSD) that appear on the TV to make the settings.
Press ⌂ on the remote controller to display the Home screen, then select MCACC with the cursors on the remote controller and press ENTER.

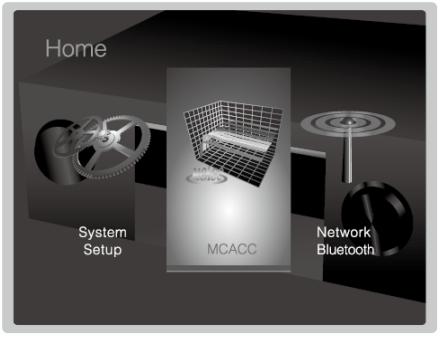

Select the item with the cursor ▲/▼/◀/▶ buttons of the remote controller and press ENTER to confirm your selection.
Use the cursors ◀/▶ to change the default values.

- To return to the previous screen, press ⮌.
- To exit the settings, press ⌂.

Full Auto MCACC

Place the supplied speaker setup microphone in the listening position, measure the test tones emitted by the speakers, then the unit automatically sets the optimum volume level for each speaker, the crossover frequencies, and the distance from the listening position. This also automatically adjusts the equalizers for the speakers and enables correction of distortion caused by the acoustic environment of the room.

- Calibration takes several minutes to be completed. The speakers emit the test tone at high volume during measurement, so be careful of your surroundings. Keep the room as quiet as possible during measurement. If the measurement is interrupted, turn off the household appliances.

1. Place the supplied speaker setup microphone in the listening position, and connect to the MCACC SETUP MIC jack on the main unit.

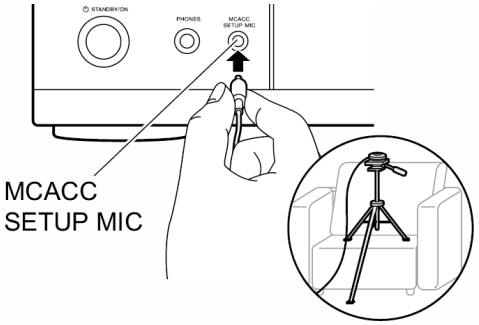

When putting the speaker setup microphone on a tripod, refer to the illustration when putting it in place.

2. Select the connected speaker configuration.

The image on the screen changes as you choose the number of channels in "Speaker Channels", so refer to it when performing the settings. Also use this screen to select whether you have connected a subwoofer.

- If you have connected a subwoofer, check the power and volume of the subwoofer. The low frequencies played by the subwoofer may not be discernible, so set its volume to at least halfway.

3. Test tones are emitted by the speakers, and firstly the unit detects the speakers connected and the noise in the environment.

4. After the results of the above measurements are displayed, select "Next", press ENTER on the remote controller, and the test tones are emitted again, and the unit automatically makes settings such as the optimum volume level and the crossover frequency.

5. When the measurement is completed, the measurement result is displayed.
   Press the cursors ◀/▶ on the remote controller to check the settings.
   Press ENTER when "Save" is selected to save the settings.

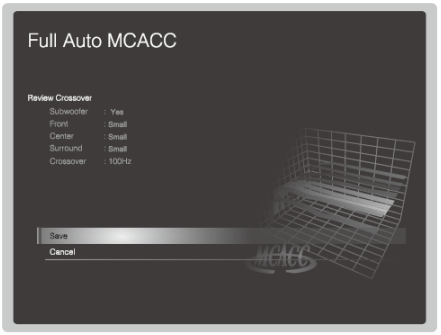

6. Disconnect the speaker setup microphone.

Manual MCACC

EQ Adjust

If you perform Full Auto MCACC then settings are automatic, but you can also adjust the output volume of the range of each connected speaker to suit your own preferences. You can adjust the volume of the different sound ranges for each of the speakers. You can set three different equalizers in Preset 1 to 3. You can select up to 4 bands for the Subwoofer and 9 bands for all other speakers.

- Front Left
  Default Value: 0 dB

  After selecting the speaker frequency from between "63 Hz" and "16 kHz" with the cursors ◀/▶, adjust the volume of that frequency between "−12.0 dB" and "+12.0 dB" with ▲/▼.
  - If an item cannot be selected even though connection is correct, check that the settings in "System Setup" - "Speaker" - "Configuration" - "Speaker Channels" matches the number of connected channels.

- Center
  Default Value: 0 dB

  After selecting the speaker frequency from between "63 Hz" and "16 kHz" with the cursors ◀/▶, adjust the volume of that frequency between "−12.0 dB" and "+12.0 dB" with ▲/▼.
  - If an item cannot be selected even though connection is correct, check that the settings in "System Setup" - "Speaker" - "Configuration" - "Speaker Channels" matches the number of connected channels.

- Front Right
  Default Value: 0 dB

  After selecting the speaker frequency from between "63 Hz" and "16

kHz" with the cursors ←/→, adjust the volume of that frequency between "−12.0 dB" and "+12.0 dB" with ↑/↓.

- If an item cannot be selected even though connection is correct, check that the settings in "System Setup" - "Speaker" - "Configuration" - "Speaker Channels" matches the number of connected channels.

☐ Surround Right
Default Value: 0 dB

After selecting the speaker frequency from between "63 Hz" and "16 kHz" with the cursors ←/→, adjust the volume of that frequency between "−12.0 dB" and "+12.0 dB" with ↑/↓.

- If an item cannot be selected even though connection is correct, check that the settings in "System Setup" - "Speaker" - "Configuration" - "Speaker Channels" matches the number of connected channels.

☐ Surround Left
Default Value: 0 dB

After selecting the speaker frequency from between "63 Hz" and "16 kHz" with the cursors ←/→, adjust the volume of that frequency between "−12.0 dB" and "+12.0 dB" with ↑/↓.

- If an item cannot be selected even though connection is correct, check that the settings in “System Setup” - “Speaker” - “Configuration” - "Speaker Channels" matches the number of connected channels.

☐ Subwoofer
Default Value: 0 dB

After selecting the speaker frequency from between "31 Hz" and "250 Hz" with the cursors ←/→, adjust the volume of that frequency between "−12.0 dB" and "+12.0 dB" with ↑/↓.

- This cannot be selected if "No" is set in "System Setup" - "Speaker" - "Configuration" - "Subwoofer".

- The result may not be as expected depending on the input source and listening mode setting.
- If you want to make the adjustments while listening to something, press 🔧 on the remote controller, and select the Preset you want to adjust in “AV Adjust” - “MCACC” - “Manual EQ Select” first.

MCACC Data Check

You can check the number of speaker channels connected and the content and values you have set for each of the speaker settings.

Speaker Setting

You can check the number of speaker channels connected and the large and small settings you have set for the low range reproduction capabilities for each of the speakers.

Channel Level

You can check the output level settings for each of the speakers.

Speaker Distance

You can check the distance from each speaker to the listening position.

Acoustic Calibration EQ

You can check the calibration values for the frequency characteristics of each speaker that were set in "Manual MCACC".

Network/Bluetooth

Make settings related to network connections and BLUETOOTH .

Operation:
Use the on-screen displays (OSD) that appear on the TV to make the settings.
Press ⌂ on the remote controller to display the Home screen, select Network/Bluetooth with the cursors on the remote controller, then press ENTER.

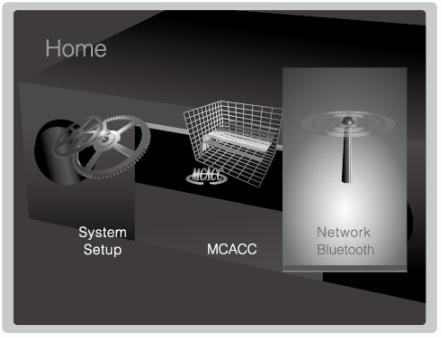

Select the item with the cursor ▲/▼/◀/▶ buttons of the remote controller and press ENTER to confirm your selection.
Use the cursors ◀/▶ to change the default values.

- To return to the previous screen, press ⮌.
- To exit the settings, press ⌂.

Network

- When LAN is configured with a DHCP, set "DHCP" to "Enable" to configure the setting automatically. ("Enable" is set by default.) To assign fixed IP addresses to each components, you must set "DHCP" to "Disable" and assign an address to this unit in "IP Address" as well as set information related to your LAN, such as Subnet Mask and Gateway.

☐ Wi-Fi
Default Value: Off(Wired)

Connect the unit to network via wireless LAN router.
"On": Wireless LAN connection
"Off (Wired)": Wired LAN connection

☐ Wi-Fi Setup

Default Value: -

You can configure wireless LAN settings by pressing ENTER when "Start" is displayed.

☐ Wi-Fi Status
Default Value: -

The information of the connected access point will be displayed.
"SSID": SSID of the connected access point.
"Signal": Signal strength of the connected access point.
"Status": Status of the connected access point.

☐ MAC Address
Default Value: -

This is the MAC address of this unit.
This value is specific to the component and cannot be changed.

☐ DHCP
Default Value: Enable

"Enable": Auto configuration by DHCP
"Disable": Manual configuration without DHCP

- If selecting "Disable", you must set "IP Address", "Subnet Mask", "Gateway", and "DNS Server" manually.

☐ IP Address
Default Value: (0.0.0.0)

Displays/Sets the IP address.

☐ Subnet Mask
Default Value: (0.0.0.0)

Displays/Sets the subnet mask.

☐ Gateway
Default Value: (0.0.0.0)

Displays/Sets the gateway.

☐ DNS Server
Default Value: (0.0.0.0)

Displays/Sets the primary DNS server.

☐ Proxy URL

Default Value: -

Displays/Sets the proxy server URL.

Proxy Port

Default Value: (8080)

Displays/Sets the proxy server port number when you enter "Proxy URL".

Friendly Name

Default Value: Pioneer VSX-831 XXX

Change the device name for this unit which is shown on other devices connected to the network to an easily recognized name.

1. Press ENTER to display the Edit screen.
2. Select a character or symbol with the cursors and press ENTER. Repeat it to input 31 or less characters.
   "A/a": Switches between upper and lower cases. (Pressing MODE on the remote controller also toggles between upper and lower cases.)
   "←" "→": Moves the cursor to the arrow direction.
   "⌫": Removes a character on the left of the cursor.
   "␣": Enters a space.
   - Pressing CLEAR on the remote controller will remove all the input characters.
3. After inputting, select "OK" with the cursors and press ENTER. The input name will be saved.

AirPlay Password

Default Value:

You can set a password of up to 31 characters so that only registered users can use AirPlay®.

1. Press ENTER to display the Edit screen.
2. Select a character or symbol with the cursors and press ENTER. Repeat it to input 31 or less characters.
   "A/a": Switches between upper and lower cases. (Pressing MODE on the remote controller also toggles between upper and lower cases.)
   "←" "→": Moves the cursor to the arrow direction.
   "⌫": Removes a character on the left of the cursor.
   "␣": Enters a space.
   - To select whether to mask the password with " ∗ " or display it in plain text, press +Fav on the remote controller.
   - Pressing CLEAR on the remote controller will remove all the input

characters.

3. After inputting, select "OK" with the cursors and press ENTER. The input password will be saved.

☐ Usage Data

Default Value: No

As a means of improving the quality of our products and services, Pioneer may collect information about your usage over the network. Select "Yes" if you agree to our collecting this information. Select "No" if you do not want us to collect this information.

- You can set this after confirming the Privacy Policy. When you select "Usage Data" and press ENTER, the Privacy Policy is displayed. (The same screen is displayed once also when setting up the network connection.) If you agree to the collection of the information, this setting also becomes "Yes". Note that if you agree to the Privacy Policy but select "No" for this setting, the information will not be collected.

☐ Network Check

Default Value: -

You can check the network connection.
Press ENTER when "Start" is displayed.

- Wait for a while if "Network" cannot be selected. It will appear when the network feature is started.

Bluetooth

☐ Bluetooth

Default Value: On

Select whether or not to use the BLUETOOTH function.
"On": Enables connection with a BLUETOOTH enabled device by using the BLUETOOTH function. Select "On" also when making various BLUETOOTH settings.
"Off": When not using the BLUETOOTH function

☐ Auto Input Change

Default Value: On

The input of the unit will automatically be switched to "BT AUDIO" when connection is made from a BLUETOOTH enabled device to the unit.
"On": The input will automatically become "BT AUDIO" when a BLUETOOTH enabled device is connected.

"Off": The function is disabled.

- If the input is not switched automatically, set to "Off" and change the input manually.

Auto Reconnect

Default Value: On

This function automatically reconnects to the BLUETOOTH enabled device connected last when you change the input to "BT AUDIO".
"On": Use this function
"Off": Do not use this function

- This may not work with some BLUETOOTH enabled devices.

Pairing Information

Default Value: -

You can initialize the pairing information saved on this unit.
Pressing ENTER when "Clear" is displayed initializes the pairing information stored in this unit.

- This function does not initialize the pairing information on the BLUETOOTH enabled device. When pairing the unit again with the device, be sure to clear the pairing information on the BLUETOOTH enabled device in advance. For information on how to clear the pairing information, refer to the BLUETOOTH enabled device's instruction manual.

Device

Default Value: -

Displays the name of the BLUETOOTH enabled device connected to the unit.

- The name is not displayed when "Status" is "Ready" and "Pairing".

Status

Default Value: -

Displays the status of the BLUETOOTH enabled device connected to the unit.
"Ready": Not paired
"Pairing": Paired
"Connected": Successfully connected

- Wait for a while if "Bluetooth" cannot be selected. It will appear when the BLUETOOTH function is started up.

AV Adjust

You can quickly adjust settings you frequently use, such as tone adjustments, etc.

Operation:
You can make the settings on the TV screen while playing something. Press on the remote controller to display the AV Adjust menu. Note that there is no display on the TV screen when the input selector is "CD", "TV", "PHONO", "FM", or "AM", so follow the main unit's display while doing the operations.

Select the item with the cursor ▲/▼ buttons of the remote controller and press ENTER to confirm your selection.
Use the cursors to change the settings.

- To return to the previous screen, press ↩.
- To exit the settings, press .

Tone

Bass :
Enhance or moderate the bass range of the speaker.

Treble :
Enhance or moderate the treble range of the speaker.

- It cannot be set if the listening mode is Direct or Pure Direct.

Level

Center :
Adjust the speaker level of the center speaker while listening to some sound.

Subwoofer :
Adjust the speaker level of the subwoofer while listening to some sound.

- The adjustment you made will be reset to the previous status when you turn the unit to standby mode.

MCACC

MCACC EQ :
Enable or disable the equalizer function that corrects for distortion caused by the acoustic environment of the room.

- It cannot be set if the listening mode is Pure Direct.

Manual EQ Select :
From the Home screen, select "Preset 1" to "Preset 3" which were set in "MCACC" - "Manual MCACC" - "EQ Adjust". The same sound field setting is applied all ranges when set to "Off".

- It cannot be set if the listening mode is Pure Direct.

Phase Control:
Correct phase disturbance in the low range to enhance the bass. This enables you to achieve powerful bass reproduction that is faithful to the original sound.

- It cannot be set if the listening mode is Pure Direct.

Theater Filter :
Adjust the soundtrack that was processed to enhance its high pitch range, in order to make it suitable for home theater. This function can be used in the following listening modes: Dolby Digital, Dolby Digital Plus, Dolby PLII Movie, Dolby TrueHD, Multichannel, DTS, DTS 96/24, DTS-HD High Resolution Audio, DTS-HD Master Audio, DTS Express, Neo:6 Cinema, and DSD.

- It cannot be set if the listening mode is Direct or Pure Direct.

Other

Sound Delay :
If the video is behind the audio, you can delay the audio to offset the gap. Different settings can be set for each input selector.

- It cannot be set if the listening mode is Pure Direct and the input signal is analog.

Sound Retriever:
Improve the quality of the compressed audio. Playback sound of lossy compressed files such as MP3 will be improved. The setting can be separately set to each input selector. The setting is effective in the signals of 48 kHz or less. The setting is not effective in the bitstream signals.

- It cannot be set if the listening mode is Direct or Pure Direct.

DRC :
Make small sounds easily heard. It is useful when you need to reduce the volume while watching a movie late night. You can enjoy the effect only when playing Dolby series and DTS series input signals.

- It cannot be set if the listening mode is Direct or Pure Direct.
- The setting cannot be used in the following cases.
  - If “Loudness Management” is set to “Off” when playing Dolby Digital Plus or Dolby TrueHD

Panorama :
Broaden the sound field laterally when playing in the Dolby Pro Logic Ⅱ Music listening mode.

Dimension :
Adjust the depth of the sound field in the front to back direction when playing in the Dolby Pro Logic Ⅱ Music listening mode. Set a small number to move the sound towards the front. Set a large number to move the sound back.

Center Width :
Adjust the width of the front sound field when playing in the Dolby Pro Logic Ⅱ Music listening mode. Set a small number to concentrate sound in the middle. Set a large number to distribute the central sound out to the left and right.

Center Image :
Adjust the width of the front sound field when playing in the DTS Neo:6 Music listening mode. Set a small number to concentrate sound in the middle. Set a large number to distribute the central sound out to the left and right.

Firmware Update

About Firmware Update

There are two methods for updating the firmware: via network and via USB. Use the one that best suits your environment.

- For the latest information on updates, visit the our company's website. There is no need to update the firmware on this unit if there is no update available.
- Before updating, make sure that the speaker setup microphone is not connected.
- During an update, do not
  - Disconnect and reconnect any cable, USB storage device, speaker setup microphone or headphones, or perform any operation on the component such as turn off its power
  - Accessing this unit from a PC or smartphone using an application
- The update may take about 20 minutes to complete for either method: via network or via USB. Furthermore, existing settings are guaranteed regardless of the method used for update.

Note that when this unit is connected to a network, you may see notifications about firmware updates on the display. To execute updating, select "Update Now" with the cursor buttons of the remote controller and press ENTER. The unit automatically turns itself into standby mode after "Completed!" appears on the display, and updating will be complete.

Disclaimer: The program and accompanying online documentation are furnished to you for use at your own risk.
Our company will not be liable and you will have no remedy for damages for any claim of any kind whatsoever concerning your use of the program or the accompanying online documentation, regardless of legal theory, and whether arising in tort or contract.
In no event will our company be liable to you or any third party for any special, indirect, incidental, or consequential damages of any kind, including, but not limited to, compensation, reimbursement or damages on account of the loss of present or prospective profits, loss of data, or for any other reason whatsoever.

Firmware Update

Updating the Firmware via Network

Preparation:

- Check that the unit is turned on, and the connection to the Internet is secured.
- Turn off the controller component (PC etc.) connected to the network.
- Stop any playing Internet radio, USB storage device, or server content.
- If "HDMI CEC" is set to "On", set it to "Off".
  - – Press ⌂ on the remote controller to display the Home screen. Next, select "System Setup" - "Hardware" - "HDMI", press ENTER, select "HDMI CEC" and select "Off".
    - ∗ The description may differ from the on-screen display but that will not change the way to operate or the function.

Update

1. Press ⌂ on the remote controller.
   The Home screen is displayed on the TV screen.

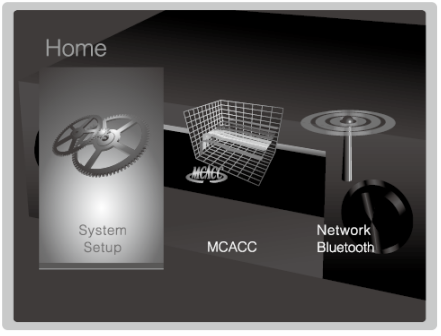

2. Select "System Setup" - "Miscellaneous" - "Firmware Update" - "Update via NET" with the cursors in order, then press ENTER.

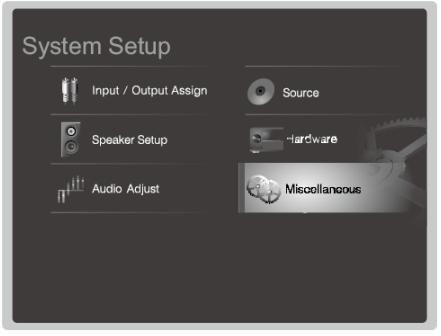

- If "Firmware Update" is grayed out and cannot be selected, wait for a while until it starts up.
- You will not be able to select "Update via NET" if there is nothing to update.

3. Press ENTER with "Update" selected to start update.
   - During the update, the TV screen may go black depending on the updated program. In that case, check the progress on the display of the unit. The TV screen will remain black until the update is complete and the power is turned on again.
   - "Completed!" is displayed when the update is complete.
4. Press ⏻STANDBY/ON on the main unit to switch the unit to standby. The process is completed and your firmware is updated to the latest version.
   - Do not use ⏻ on the remote controller.

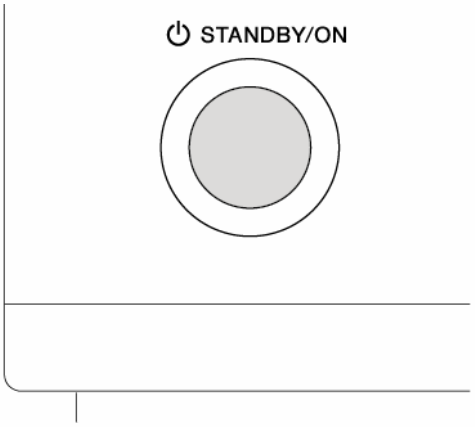

If an Error Message is Displayed

When an error occurs, "＊-＊＊ Error!" is displayed on the display of the unit. ("＊" represents an alphanumeric character.) Check the following:

Error Code

- **＊-01, ＊-10**:
  Ethernet cable not found. Connect the Ethernet cable properly.
- **＊-02, ＊-03, ＊-04, ＊-05, ＊-06, ＊-11, ＊-13, ＊-14, ＊-16, ＊-17, ＊-18, ＊-20, ＊-21**:
  Internet connection error. Check the following:
  – The router is turned on
  – This unit and the router are connected via the network
  Try to disconnect and then connect again the power to the unit and router. This may solve the problem. If you are still unable to connect to the Internet, the DNS server or proxy server may be temporarily down. Check the service status with your ISP provider.
- **Others**
  Disconnect then reconnect the AC power cord, then repeat from the beginning.

Firmware Update

Updating via USB

Preparation:

- Prepare a 128MB or larger USB storage device. FAT16 or FAT32 file system format.
  - Media inserted in a USB card reader may not be used for this function.
  - USB storage devices with security function are not supported.
  - USB hubs and USB devices with hub function are not supported. Do not connect these devices to the unit.
- Delete any data stored on the USB storage device.
- Turn off the controller component (PC etc.) connected to the network.
- Stop any playing Internet radio, USB storage device, or server content.
- If "HDMI CEC" is set to "On", set it to "Off".
  - Press on the remote controller to display the Home screen. Next, select "System Setup" - "Hardware" - "HDMI", press ENTER, select "HDMI CEC" and select "Off".

  * Some USB storage devices may take long to load, may not be loaded correctly, or may not be correctly fed depending on the device or their content.
  * Our company will not be liable whatsoever for any loss or damage of data, or storage failure arising from the use of the USB storage device with this unit. Thank you for your understanding.
  * The description may differ from the on-screen display but that will not change the way to operate or the function.

Update

1. Connect the USB storage device to your PC.
2. Download the firmware file from our company's website to your PC and unzip.
   Firmware files are named in the following way:
   PIOAVR＊＊＊＊_＊＊＊＊＊＊＊＊＊＊＊＊.zip
   Unzip the file on your PC. The number of unzipped files and folders varies depending on the model.
3. Copy all unzipped files and folders to the root folder of the USB storage device.
   - Make sure to copy the unzipped files.

4. Connect the USB storage device to the USB port of the unit.
   - If you connect a USB hard disk drive to the USB port of the unit, we recommend that you use its AC adapter to power it.
   - If the USB storage device has been partitioned, each section will be treated as an independent device.
5. Press ⌂ on the remote controller.
   The Home screen is displayed on the TV screen.

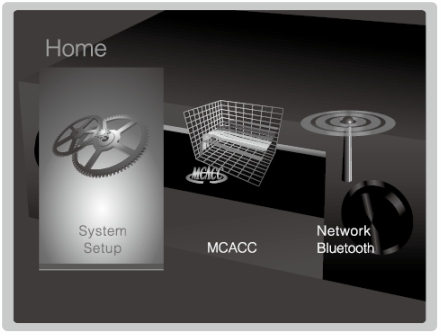

6. Select "System Setup" - "Miscellaneous" - "Firmware Update" - "Update via USB" with the cursors in order, then press ENTER.

   - If "Firmware Update" is grayed out and cannot be selected, wait for a while until it starts up.
   - You will not be able to select "Update via USB" if there is nothing to update.

7. Press ENTER with "Update" selected to start update.
   - During the update, the TV screen may go black depending on the updated program. In that case, check the progress on the display of the unit. The TV screen will remain black until the update is complete and the power is turned on again.
   - During the update, do not turn off, or disconnect then reconnect the USB storage device.
   - "Completed!" is displayed when the update is complete.

8. Disconnect the USB storage device from the unit.

9. Press ⏻STANDBY/ON on the main unit to switch the unit to standby. The process is completed and your firmware is updated to the latest version.
   - Do not use ⏻ on the remote controller.

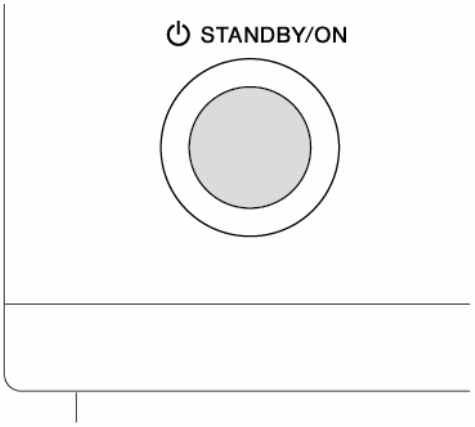

If an Error Message is Displayed

When an error occurs, "＊-＊＊ Error!" is displayed on the display of the unit. ("＊" represents an alphanumeric character.) Check the following:

Error Code

- **＊-01, ＊-10**:
  USB storage device not found. Check whether the USB storage device or USB cable is correctly inserted to the USB port of the unit.
  Connect the USB storage device to an external power source if it has its own power supply.
- **＊-05, ＊-13, ＊-20, ＊-21**:
  The firmware file is not present in the root folder of the USB storage device, or the firmware file is for another model. Retry from the download of the firmware file.
- **Others**
  Disconnect then reconnect the AC power cord, then repeat from the beginning.

Selecting Listening Modes

You can change the listening mode during play by pressing repeatedly "AUTO/DIRECT", "SURR", or "STEREO".

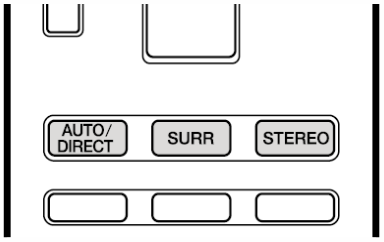

AUTO/DIRECT button

Press repeatedly and the listening modes suited to the input signal are switched between "Auto Surround", "Direct", and "Pure Direct". After selecting one of them, "Auto Surround" (or "Direct" or "Pure Direct") is displayed, then the most suitable listening mode for the audio format is selected automatically (Dolby Digital for multi-channel input signals, Stereo for 2 channel input signals, etc.) and an indicator such as "Dolby D" is displayed on the display.

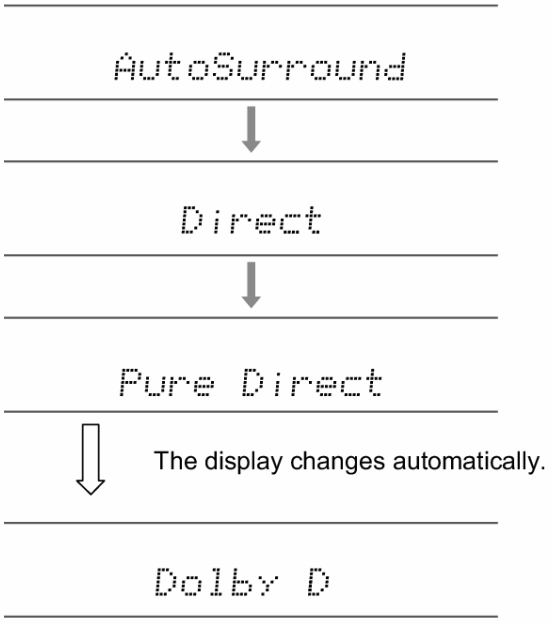

The "Direct" mode shuts down some processing that can affect sound quality, such as the tone control features, so you can enjoy even better sound quality. The "Pure Direct" mode shuts down even more processes that

affects sound quality, so you get a more faithful reproduction of the original sound. In this case, the speaker calibration made with MCACC is invalid.

SURR button

By pressing repeatedly you can select the audio format of the signals being input and switch between a variety of listening modes. Select the mode that suits your preference. The selected listening mode is displayed on the display.

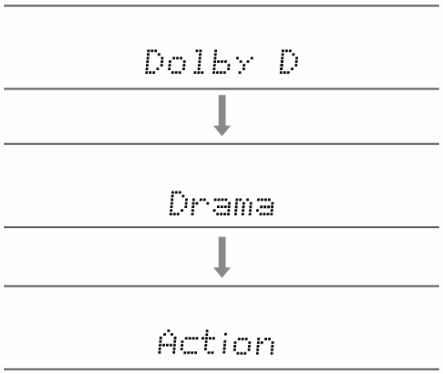

STEREO button

You can select the "Stereo" mode to playback only from the front speakers and subwoofer.

> For details on the effects of each of the listening modes see "Listening Mode Effects". For listening modes selectable for each of the audio formats in the input signals, refer to "Selectable Listening Modes".

Listening Mode Effects

In alphabetical order

Action

Mode suitable for movies with a lot of action scenes.

AdvancedGame

Mode suitable for game content.

Classical

Suitable for classical or operatic music. This mode emphasizes the surround channels in order to widen the stereo image, and simulates the natural reverberation of a large hall.

Dolby D (Dolby Digital)

This mode faithfully reproduces the sound design recorded in the Dolby Digital audio format.
Dolby Digital is a multi-channel digital format developed by Dolby Laboratories, Inc. widely adopted for use in movie production. It is also a standard audio format on DVD-Video and Blu-ray Discs. It is possible to record a maximum of 5.1 channels on a DVD-Video or Blu-ray Disc; two front channels, a center channel, two surround channels, and the LFE channel dedicated to the bass region (sound elements for the subwoofer).

- To enable transfer of this audio format, connect via digital cable and set audio output on the player to bitstream output.

Dolby D＋ (Dolby Digital Plus)

This mode faithfully reproduces the sound design recorded in the Dolby Digital Plus audio format.
The Dolby Digital Plus format is a revision based on Dolby Digital, increasing the number of channels and endeavoring to improve sound quality by giving more flexibility in data bit rates. Dolby Digital Plus is used as an optional audio format on Blu-ray Discs, based on 5.1ch, but with additional channels

such as the Surround Back channel added for a maximum of 7.1ch.

- To enable transfer of this audio format, connect via HDMI cable and set audio output on the player to bitstream output.

Dolby PL Ⅱ（Dolby Pro Logic Ⅱ）

These listening modes allow you to expand the playback signal to 5.1 channels to suit the connected speaker configuration when the input signal is 2 channel. Broadening the sound field provides you with a seamless sound with more depth and realism. Along with CD and movie sources, games can also benefit from the vivid sound localization. Choose from a mode ideal for movies (Movie), a mode ideal for music (Music), and a mode ideal for gaming (Game).

Dolby TrueHD

This mode faithfully reproduces the sound design recorded in the Dolby TrueHD audio format.
The Dolby TrueHD audio format is a reversible format expanded based on the lossless compression technology referred to as MLP, and it makes it possible to faithfully reproduce the master audio recorded in the studio. Dolby TrueHD is used as an optional audio format on Blu-ray Discs, based on 5.1ch, but with additional channels such as the Surround Back channel added for a maximum of 7.1ch. 7.1ch is recorded at 96kHz/24bit, and 5.1ch is recorded at 192kHz/24bit.

- To enable transfer of this audio format, connect via HDMI cable and set audio output on the player to bitstream output.

Drama

Suitable for TV shows produced in a TV studio. This mode enhances the surround effects to the entire sound to give clarity to voices and create a realistic acoustic image.

DSD

Mode suitable for playing sources recorded in DSD.

- This unit supports DSD signals input through HDMI IN. However, depending on the connected player, better sound is possible when output from the PCM output of the player.
- This listening mode cannot be selected if the output setting on your Blu-ray Disc/DVD player is not set to DSD.

DTS

This mode faithfully reproduces the sound design recorded in the DTS audio

format.
The DTS audio format is a multi-channel digital format developed by DTS, Inc. This format is an optional audio format on DVD-Video and a standard on Blu-ray Discs. It enables recording of 5.1 channels; two front channels, a center channel, two surround channels, and the LFE channel dedicated to the bass region (sound elements for the subwoofer). The content is recorded with a rich volume of data, with maximum sampling rate of 48kHz at a resolution of 24 bits and a bit rate of 1.5 Mbps.

- To enable transfer of this audio format, connect via digital cable and set audio output on the player to bitstream output.

DTS 96/24

This mode faithfully reproduces the sound design recorded in the DTS 96/24 audio format.
The DTS 96/24 format is an optional audio format on DVD-Video and Blu-ray Discs. It enables recording of 5.1 channels; two front channels, a center channel, two surround channels, and the LFE channel dedicated to the bass region (sound elements for the subwoofer). Detailed reproduction is achieved by recording the content at a sampling rate of 96kHz at a resolution of 24 bits.

- To enable transfer of this audio format, connect via digital cable and set audio output on the player to bitstream output.

DTS Express

This mode faithfully reproduces the sound design recorded in the DTS Express audio format.
DTS Express is used as an optional audio format on Blu-ray Discs, based on 5.1ch, but with channels such as the surround back channel added for a maximum of 7.1ch. It also supports low bit rates.

- To enable transfer of this audio format, connect via HDMI cable and set audio output on the player to bitstream output.

DTS-HD HR (DTS-HD High Resolution Audio)

This mode faithfully reproduces the sound design recorded in the DTS-HD High Resolution Audio audio format.
DTS-HD High Resolution Audio is used as an optional audio format on Blu-ray Discs, based on 5.1ch, but with additional channels such as the Surround Back channel added for a maximum of 7.1ch. It can be recorded at a sampling rate of 96kHz with a resolution of 24 bits.

- To enable transfer of this audio format, connect via HDMI cable and set audio output on the player to bitstream output.

DTS-HD MSTR (DTS-HD Master Audio)

This mode faithfully reproduces the sound design recorded in the DTS-HD Master Audio audio format.
DTS-HD Master Audio is used as an optional audio format on Blu-ray Discs, based on 5.1ch, but with additional channels such as the Surround Back channel added for a maximum of 7.1ch, recorded using lossless audio reproduction technology. 96kHz/24bit is supported with 7.1ch, and 192kHz/24bit is supported with 5.1ch.

- To enable transfer of this audio format, connect via HDMI cable and set audio output on the player to bitstream output.

DTS Neo:6

These listening modes allow you to expand the playback signal to 5.1 channels to suit the connected speaker configuration when the input signal is 2 channel. It offers full-bandwidth on all channels, with great independence between the channels. There are two variants for this mode: Neo:6 Cinema which is ideal for movies and Neo:6 Music which is ideal for music.

Ent.Show (Entertainment Show)

Suitable for rock or pop music. Listening to music in this mode creates a lively sound field with a powerful acoustic image, like being at a club or rock concert.

Ext.Mono (Extended Mono)

In this mode, all speakers output the same sound in mono, so the sound you hear is the same regardless of where you are within the listening room.

Ext.Stereo (Extended Stereo)

Ideal for background music, this mode fills the entire listening area with stereo sound from the front, surround, and surround back speakers.

F.S.Surround (Front Stage Surround)

In this mode, you can enjoy a virtual playback of multichannel surround sound even with only two or three speakers. This works by controlling how sounds reach the listener' s left and right ears.

Mono

Use this mode when watching an old movie with a mono soundtrack, or use

it to separately reproduce soundtracks in two different languages recorded in the left and right channels of some movies. It is also suitable for DVDs or other sources containing multiplexed audio.

Multich PCM (Multichannel PCM)

Mode suitable for playing sources recorded in multichannel PCM.

Rock/Pop

Mode suitable for rock content.

Sports

Mode suitable for sport content.

Stereo

In this mode, sound is output from the front left and right speakers and subwoofer.

Unplugged

Suitable for acoustic instruments, vocals and jazz. This mode emphasizes the front stereo image, giving the impression of being right in front of the stage.

Selectable Listening Modes

You can select a variety of listening modes to suit the audio format of the signal being input.

- The Stereo mode can be selected with any audio format.
- When analog signals are being input in the Pure Direct mode, the modes switches to the Analog Direct mode which passes signals directly to the amplifier without passing through the DSP (Digital Signal Processor).
- Listening modes available when headphones are connected are Pure Direct and Stereo only.

Selectable listening modes

Input Format

Analog

Stereo
Mono
PL Ⅱ Movie*1
PL Ⅱ Music*1
PL Ⅱ Game*1
Neo:6 Cinema*1
Neo:6 Music*1
Classical*2
Unplugged*2
Ent.Show*2
Drama*2
AdvancedGame*2
Action*2
Rock/Pop*2
Sports*2
Ext.Stereo*1
Ext.Mono*1
F.S.Surround

*1 A center speaker or surround speakers need to be installed.
*2 Surround speakers need to be installed.

PCM
Music files (except DSD/Dolby TrueHD)

Stereo
Mono
PL Ⅱ Movie*1
PL Ⅱ Music*1
PL Ⅱ Game*1
Neo:6 Cinema*1
Neo:6 Music*1
Classical*2
Unplugged*2
Ent.Show*2
Drama*2
AdvancedGame*2
Action*2
Rock/Pop*2
Sports*2
Ext.Stereo*1
Ext.Mono*1
F.S.Surround

*1 A center speaker or surround speakers need to be installed.
*2 Surround speakers need to be installed.

Multich PCM

Stereo
Multich PCM*1
Classical*2
Unplugged*2
Ent.Show*2
Drama*2
AdvancedGame*2
Action*2
Rock/Pop*2
Sports*2
Ext.Stereo*1

Ext.Mono*1
F.S.Surround

*1 A center speaker or surround speakers need to be installed.
*2 Surround speakers need to be installed.

DSD

Stereo
DSD*1 *2
PL Ⅱ Movie*3
PL Ⅱ Music*3
PL Ⅱ Game*3
Neo:6 Cinema*3
Neo:6 Music*3
Classical*4
Unplugged*4
Ent.Show*4
Drama*4
AdvancedGame*4
Action*4
Rock/Pop*4
Sports*4
Ext.Stereo*2
Ext.Mono*2
F.S.Surround

*1 Cannot be selected when the input format is monaural or 2 ch.
*2 A center speaker or surround speakers need to be installed.
*3 Can only be selected when the input format is 2 ch and a center speaker or surround speakers are installed.
*4 Surround speakers need to be installed.

Dolby D

Stereo
Dolby D*1 *2
PL Ⅱ Movie*3
PL Ⅱ Music*3
PL Ⅱ Game*3
Neo:6 Cinema*3

Neo:6 Music*3
Classical*4
Unplugged*4
Ent.Show*4
Drama*4
AdvancedGame*4
Action*4
Rock/Pop*4
Sports*4
Ext.Stereo*2
Ext.Mono*2
F.S.Surround

*1 Cannot be selected when the input format is 2 ch.
*2 A center speaker or surround speakers need to be installed.
*3 Can only be selected when the input format is 2 ch and a center speaker or surround speakers are installed.
*4 Surround speakers need to be installed.

☐ Dolby D+

Stereo
Dolby D+*1 *2 *3
PL Ⅱ Movie*4
PL Ⅱ Music*4
PL Ⅱ Game*4
Neo:6 Cinema*4
Neo:6 Music*4
Classical*5
Unplugged*5
Ent.Show*5
Drama*5
AdvancedGame*5
Action*5
Rock/Pop*5
Sports*5
Ext.Stereo*2
Ext.Mono*2
F.S.Surround

*1 Cannot be selected when the input format is 2 ch.
*2 A center speaker or surround speakers need to be installed.
*3 Dolby D+ cannot be selected if the input source is Blu-ray Disc. You can select the Dolby D listening mode instead.
*4 Can only be selected when the input format is 2 ch and a center speaker or surround speakers are installed.
*5 Surround speakers need to be installed.

Dolby TrueHD

Stereo
Dolby TrueHD*1 *2
PL Ⅱ Movie*3
PL Ⅱ Music*3
PL Ⅱ Game*3
Neo:6 Cinema*3
Neo:6 Music*3
Classical*4
Unplugged*4
Ent.Show*4
Drama*4
AdvancedGame*4
Action*4
Rock/Pop*4
Sports*4
Ext.Stereo*2
Ext.Mono*2
F.S.Surround

*1 Cannot be selected when the input format is 2 ch.
*2 A center speaker or surround speakers need to be installed.
*3 Can only be selected when the input format is 2 ch and a center speaker or surround speakers are installed.
*4 Surround speakers need to be installed.

DTS

Stereo
DTS*1 *2
PL Ⅱ Movie*3
PL Ⅱ Music*3

PL Ⅱ Game *3
Neo:6 Cinema *3
Neo:6 Music *3
Classical *4
Unplugged *4
Ent.Show *4
Drama *4
AdvancedGame *4
Action *4
Rock/Pop *4
Sports *4
Ext.Stereo *2
Ext.Mono *2
F.S.Surround

*1 Cannot be selected when the input format is 2 ch.
*2 A center speaker or surround speakers need to be installed.
*3 Can only be selected when the input format is 2 ch and a center speaker or surround speakers are installed.
*4 Surround speakers need to be installed.

☐ DTS 96/24

Stereo
DTS 96/24 *1 *2
PL Ⅱ Movie *3
PL Ⅱ Music *3
PL Ⅱ Game *3
Neo:6 Cinema *3
Neo:6 Music *3
Classical *4
Unplugged *4
Ent.Show *4
Drama *4
AdvancedGame *4
Action *4
Rock/Pop *4
Sports *4
Ext.Stereo *2

Ext.Mono*2
F.S.Surround

*1 Cannot be selected when the input format is 2 ch.
*2 A center speaker or surround speakers need to be installed.
*3 Can only be selected when the input format is 2 ch and a center speaker or surround speakers are installed.
*4 Surround speakers need to be installed.

DTS Express

Stereo
DTS Express*1 *2
PL Ⅱ Movie*3
PL Ⅱ Music*3
PL Ⅱ Game*3
Neo:6 Cinema*3
Neo:6 Music*3
Classical*4
Unplugged*4
Ent.Show*4
Drama*4
AdvancedGame*4
Action*4
Rock/Pop*4
Sports*4
Ext.Stereo*2
Ext.Mono*2
F.S.Surround

*1 Cannot be selected when the input format is 2 ch.
*2 A center speaker or surround speakers need to be installed.
*3 Can only be selected when the input format is 2 ch and a center speaker or surround speakers are installed.
*4 Surround speakers need to be installed.

DTS-HD HR

Stereo
DTS-HD HR*1 *2
PL Ⅱ Movie*3

PL Ⅱ Music*3
PL Ⅱ Game*3
Neo:6 Cinema*3
Neo:6 Music*3
Classical*4
Unplugged*4
Ent.Show*4
Drama*4
AdvancedGame*4
Action*4
Rock/Pop*4
Sports*4
Ext.Stereo*2
Ext.Mono*2
F.S.Surround

*1 Cannot be selected when the input format is 2 ch.
*2 A center speaker or surround speakers need to be installed.
*3 Can only be selected when the input format is 2 ch and a center speaker or surround speakers are installed.
*4 Surround speakers need to be installed.

☐ DTS-HD MSTR

Stereo
DTS-HD MSTR*1 *2
PL Ⅱ Movie*3
PL Ⅱ Music*3
PL Ⅱ Game*3
Neo:6 Cinema*3
Neo:6 Music*3
Classical*4
Unplugged*4
Ent.Show*4
Drama*4
AdvancedGame*4
Action*4
Rock/Pop*4
Sports*4

Ext.Stereo*2

Ext.Mono*2

F.S.Surround

*1 Cannot be selected when the input format is 2 ch.

*2 A center speaker or surround speakers need to be installed.

*3 Can only be selected when the input format is 2 ch and a center speaker or surround speakers are installed.

*4 Surround speakers need to be installed.

AM/FM radio

Tuning into a Radio Station

Tuning Automatically

1. Press TUNER on the remote controller several times to select either "AM" or "FM".
2. Press MODE on the remote controller so that "TunMode:Auto" appears on the display.
3. Press the cursors ▲/▼ on the remote controller to start automatic tuning.
   - Searching automatically stops when a station is found. When tuned into a radio station, the "TUNED" indicator on the display lights. When tuned into an FM radio station, the "STEREO" indicator lights.
   - No sound is output while the "TUNED" indicator is off.

When FM broadcasts reception is poor:
Radio waves may be weak depending on the building structure and environmental conditions. In that case, perform the procedure as explained below in "Tuning Manually" to manually select the desired station.

Tuning Manually

1. Press TUNER on the remote controller several times to select either "AM" or "FM".
2. Press MODE on the remote controller so that "TunMode:Manual" appears on the display.
3. While pressing the cursors ▲/▼ on the remote controller, select the desired radio station.
   - The frequency changes by 1 step each time you press the button. The frequency changes continuously if the button is held down and stops when the button is released. Tune by looking at the display.

To return to the auto tuning mode:
Press MODE on the remote controller again so that "TunMode:Auto" appears on the display. The unit tunes automatically into a radio station.

AM/FM radio

Presetting a Radio Station

It allows you to register up to 40 of your favorite AM/FM radio stations. Registering radio stations in advance allows you to tune into your radio station of choice directly.

Registration Procedure

1. Tune into the AM/FM radio station you want to register.
2. Press +Fav on the remote controller so that the preset number on the display flashes.
3. While the preset number is flashing (about 8 seconds), repeatedly press ◀/▶ on the remote controller to select a number between 1 and 40 .
4. Press +Fav on the remote controller again to register the station.
   - When the station is registered, the preset number stops flashing.
   - Repeat this procedure for all of your favorite AM/FM radio stations.

Selecting a Preset Radio Station

1. Press TUNER on the remote controller.
2. Press ◀/▶ on the remote controller to select a preset number.

Deleting a Preset Radio Station

1. Press TUNER on the remote controller.
2. Press ◀/▶ on the remote controller to select the preset number to delete.
3. After pressing +Fav on the remote controller, press CLEAR while the preset number is flashing to delete the preset number.
   - When deleted, the number on the display goes off.

AM/FM radio

Using RDS (European, Australian and Asian models)

RDS stands for Radio Data System and is a method of transmitting data in FM radio signals. In regions using RDS, the radio station name is displayed when you tune into a radio station broadcasting program information. When you press *i* on the remote controller in this state, you can use the following functions.

Display text information (Radio Text)

1. While the name of the station is being displayed on the display, press *i* on the remote controller once.
   Radio Text (RT) broadcast by the station is displayed scrolling across the display. "No Text Data" is displayed when no text information is available.

- Unusual characters may be displayed when the unit receives unsupported characters. However, this is not a malfunction. Also, if the signal from a station is weak, information may not be displayed.

Search for stations by Program Type

1. While the name of the station is being displayed on the display, press *i* on the remote controller twice.
2. Press ◀/▶ on the remote controller to select the Program Type you want to find, then press ENTER to start the search.
   The Program Types displayed are as follows:
   None
   News (News reports)
   Affairs (Current affairs)
   Info (Information)
   Sport
   Educate (Education)
   Drama
   Culture
   Science (Science and technology)
   Varied
   Pop M (Pop music)
   Rock M (Rock music)
   Easy M (Middle of the road music)

Light M (Light classics)
Classics (Serious classics)
Other M (Other music)
Weather
Finance
Children (Children's programmes)
Social (Social affairs)
Religion
Phone In
Travel
Leisure
Jazz (Jazz music)
Country (Country music)
Nation M (National music)
Oldies (Oldies music)
Folk M (Folk music)
Document (Documentary)

- The information displayed may sometimes not match the content being broadcast by the station.

3. When a station is found, the station flashes on the display. Press ENTER while this is happening to start receiving that station. If you don't press ENTER, the unit continues to search for another station.
   - If no stations are found, the message "Not Found" is displayed.
   - Unusual characters may be displayed when the unit receives unsupported characters. However, this is not a malfunction. Also, if the signal from a station is weak, information may not be displayed.

USB Storage Device

Playing Back

Play music files on a USB storage device.

1. Switch the input on the TV to that assigned to the unit.
2. Plug your USB storage device with the music files into the USB port of this unit.
3. Press "USB" on the remote controller.
   - If the "USB" indicator flashes on the display, check whether the USB storage device is plugged in properly.
   - Do not unplug the USB storage device while "Connecting..." is appeared on the display. This may cause data corruption or malfunction.
4. Press ENTER on the remote controller again in the next screen. The list of folders and music files on the USB storage device are displayed. Select the folder with the cursors and press ENTER to confirm your selection.
5. With the cursors on the remote controller, select the music file, and then press ENTER to start playback.
   - The USB port of this unit conforms with the USB 2.0 standard. The transfer speed may be insufficient for some content you play, which may cause some interruption in sound.

- To return to the previous screen, press ⮌.

Operations with the remote controller:

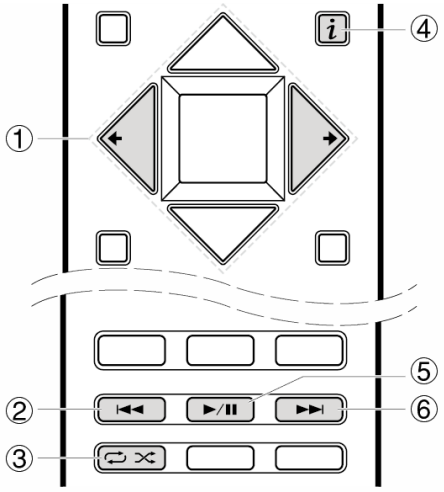

① ◄/►: When the folder or file lists are not shown on one screen, you can change the screen.
② ⏮: This button plays the previous track.
③ 🔁 🔀: This button lets you start repeat or random playback. Pressing this button repeatedly cycles through the repeat modes.
④ *i* : Pressed during play, this button changes the displayed track information. Pressed while a folder or file list is displayed, this button returns you to the play screen.
⑤ ►/❚❚: Pressed during play this button pauses playback. Pressed while paused, and it restarts play.
⑥ ⏭: This button plays the next track.

Icons Displayed during Playback:
Icons are displayed on the display during music file playback. The meaning of each icon is as follows:

: Folder

: Track

: Play

: Pause

: Artist

: Album

: Repeat One Track

: Repeat within a folder

: Shuffle

USB Storage Device Requirements

- This unit can use USB storage devices that comply with the USB mass storage device class standard.
- FAT16 or FAT32 file system format.
- If the USB storage device has been partitioned, each section will be treated as an independent device.
- Up to 20,000 tracks per folder can be displayed, and folders may be nested up to 16 levels deep.
- USB hubs and USB storage devices with hub functions are not supported. Do not connect these devices to the unit.
- USB storage devices with security function are not supported on this unit.
- If you connect a USB hard disk drive to the USB port of the unit, we recommend that you use its AC adapter to power it.
- Media inserted to the USB card reader may not be available in this function. Depending on the USB storage device, proper reading of the contents may not be possible.
- Our company accepts no responsibility whatsoever for the loss or damage to data stored on a USB storage device when that device is used with this unit. We recommend that you back up your important music files beforehand.

Supported Audio Formats

For server playback and playback from a USB storage device, this unit supports the following music file formats. Note that sound files that are protected by copyright cannot be played on this unit.

MP3 (.mp3/.MP3):
- Supported formats: MPEG-1/MPEG-2 Audio Layer 3
- Supported sampling rates: 44.1 kHz, 48 kHz
- Supported bitrates: Between 8 kbps and 320 kbps. Incompatible files cannot be played.

WMA (.wma/.WMA):
- Supported sampling rates: 44.1 kHz, 48 kHz
- Supported bitrates: Between 5 kbps and 320 kbps. Incompatible files cannot be played.
- WMA Pro/Voice/WMA Lossless formats are not supported.

WAV (.wav/.WAV):
WAV files include uncompressed PCM digital audio.
- Supported sampling rates: 44.1 kHz, 48 kHz, 64 kHz, 88.2 kHz, 96 kHz, 176.4 kHz, 192 kHz
- Quantization bit: 8 bit, 16 bit, 24 bit

AIFF (.aiff/.aif/.aifc/.afc/.AIFF/.AIF/.AIFC/.AFC):
AIFF files include uncompressed PCM digital audio.
- Supported sampling rates: 44.1 kHz, 48 kHz, 64 kHz, 88.2 kHz, 96 kHz,

176.4 kHz, 192 kHz
- Quantization bit: 8 bit, 16 bit, 24 bit

AAC (.aac/.m4a/.mp4/.3gp/.3g2/.AAC/.M4A/.MP4/.3GP/.3G2):
- Supported formats: MPEG-2/MPEG-4 Audio
- Supported sampling rates: 44.1 kHz, 48 kHz, 64 kHz, 88.2 kHz, 96 kHz
- Supported bitrates: Between 8 kbps and 320 kbps. Incompatible files cannot be played.

FLAC (.flac/.FLAC):
- Supported sampling rates: 44.1 kHz, 48 kHz, 64 kHz, 88.2 kHz, 96 kHz, 176.4 kHz, 192 kHz
- Quantization bit: 8 bit, 16 bit, 24 bit

Apple Lossless (.m4a/.mp4/.M4A/.MP4):
- Supported sampling rates: 44.1 kHz, 48 kHz, 64 kHz, 88.2 kHz, 96 kHz, 176.4 kHz, 192 kHz
- Quantization bit: 16 bit, 24 bit

DSD (.dsf/.dff/.DSF/.DFF):
- Supported formats: DSF/DSDIFF
- Supported sampling rates: 2.8 MHz, 5.6 MHz

Dolby TrueHD (.vr/.mlp/.VR/.MLP):
- Supported sampling rates: 44.1 kHz, 48 kHz, 88.2 kHz, 96 kHz, 176.4 kHz, 192 kHz
- Variable bit-rate (VBR) files are supported. However, playback times may not be displayed correctly.
- This unit supports the gapless playback of the USB storage device in the following conditions.
  When playing WAV, FLAC and Apple Lossless, and the same format, sampling frequency, channels and quantization bit rate are played continuously

Internet Radio

TuneIn Radio

With more than 70,000 radio stations and 2 million on-demand programs registered, TuneIn Radio is a service where you can enjoy music, sports and news from all over the world.

Playing Back

1. Switch the input on the TV to that assigned to the unit.
2. Press NET on the remote controller to display the network service list screen.

3. Select "TuneIn" with the cursors of the remote controller and press ENTER to confirm your selection.
4. Follow the on-screen instructions, using the cursors on the remote controller to select radio stations and programs, then press ENTER to play.
   Play starts when 100% is displayed for buffering.

- To return to the previous screen, press ⮌.

Operations with the remote controller:

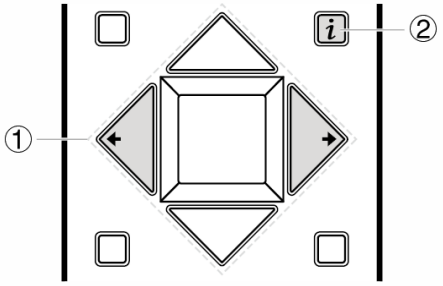

① ◀/▶: When the station or program lists are not shown on one screen, you can change the screen.
② *i* : Pressed during play, this button changes the displayed track information. Pressed while a station or program list is displayed, this button returns you to the play screen.

Regarding the TuneIn Radio Menu

To display the TuneIn Radio menu during play, press ENTER on the remote controller. Selecting the corresponding menu item with the cursors and pressing ENTER allows you to perform the following operations:

Add to My Presets: Registers radio stations being broadcast and programs in "My Presets". Once registered, "My Presets" is displayed in the level under TuneIn Radio. To play, select the program you like from "My Presets".

Remove from My Presets: Removes a radio station or program from "My Presets".

Regarding the TuneIn Radio Account

Creating an account on the TuneIn Radio website (tunein.com) and logging in it from the unit allows you to automatically add your favorite radio stations and programs to your "My Presets" on the unit as you follow them on the website. "My Presets" are displayed in the level under TuneIn Radio.
To display a radio station registered in "My Presets", you must log into TuneIn Radio from the unit. To log in, select "Login" - "I have a Tunein Account" in the "TuneIn Radio" top list on the unit, and then enter your user name and password.

- If you associate the device on My Page within the TuneIn Radio website using the registration code obtained by selecting "Login" - "Login with a registration code" on the unit, you can log in without entering the user name and password.

Icons on the display

: Folder

: Radio station

: Playing

: Artist

: Album

Internet Radio

Pandora®–Getting Started (U.S., Australia and New Zealand only)

Pandora is a free, personalized Internet radio service that plays the music you know and helps you discover music you' ll love.

Playing Back

1. Switch the input on the TV to that assigned to the unit.
2. Press NET on the remote controller to display the network service list screen.

3. With the cursors on the remote controller, select "Pandora", and then press ENTER.
4. Use ↑/↓ on the remote controller to select "I have a Pandora Account" or "I'm new to Pandora" and then press ENTER.
   If you are new to Pandora, select "I'm new to Pandora". You will see an activation code on your TV screen. Please write down this code. Go to an Internet connected computer and point your browser to www.pandora.com/pioneer. Enter your activation code and then follow the instructions to create your Pandora account and your personalized Pandora stations. You can create your stations by entering your favorite tracks and artists when prompted. After you have created your account and stations you can return to your receiver and press ENTER to begin listening to your personalized Pandora.
   If you have an existing Pandora account, you can add your Pandora account to your receiver by selecting "I have a Pandora Account" and logging in with your email and password.

5. To play a station, use ↑/↓ on the remote controller to select the station from your station list, and then press ENTER. Playback starts and the playback screen appears.

- To return to the previous screen, press ⮌.

Operations with the remote controller:

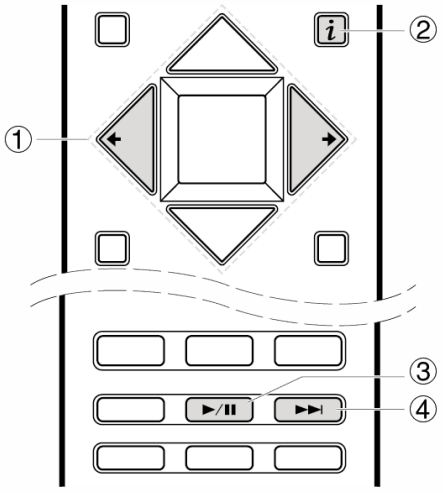

① ←/→: When the station or program lists are not shown on one screen, you can change the screen.
② *i* : Pressed during play, this button changes the displayed track information. Pressed while a station or program list is displayed, this button returns you to the play screen.
③ ►/❚❚: Pressed during play this button pauses playback. Pressed while paused, and it restarts play.
④ ►►|: This button plays the next track.

Create new station

Enter the name of a track, artist, or genre and Pandora will create a unique radio station for you based on the musical qualities of that track, artist, or genre.

Regarding the Pandora Menu

Icons are displayed at the bottom right of the screen while playing a station. You can do the following by selecting the icon with ↑/↓ on the remote controller and pressing ENTER:

(**I like this track**): Give a track "thumbs-up" and Pandora will play more music like it.

(**I don't like this track**): Give a track "thumbs-down" and Pandora will ban that track from the current station.

: Automatically find stations matching your preferences based on genre, specific artists, and songs, and delete those stations you don't need.

Icons on the display

: Folder

: Radio station

: Playing

: Pause

: Artist

: Album

Spotify

This unit supports Spotify Connect. To enable Spotify Connect, install the Spotify application on your smartphone or tablet and create a Spotify premium account.

- This unit needs to be connected to the same router as the smartphone or tablet.
- Refer to the following for Spotify settings: www.spotify.com/connect/
- The Spotify software is subject to third party licenses found here: www.spotify.com/connect/third-party-licenses

Playing Back

1. Connect the smartphone to the network that this unit is connected to.
2. When the power of this unit is on, click the Connect icon in the track play screen of the Spotify app.
3. Select this unit.
4. The input selector of this unit automatically changes to NET and streaming of Spotify starts.

- When "System Setup" - "Power Management" - "Network Standby" in the Home screen is set to "On", by clicking the Connect icon and selecting this unit, then even if this unit is in standby mode, the power will come on automatically and streaming starts.

Operations with the remote controller:

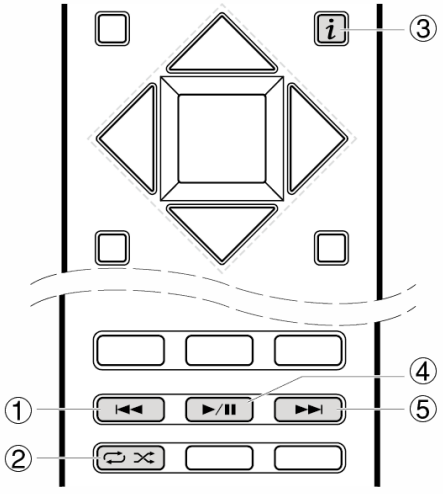

① ⏮: This button plays the previous track.
② 🔁 🔀: This button lets you start repeat or random playback. Pressing this button repeatedly cycles through the repeat modes.
③ *i* : Pressed during play, this button changes the displayed track information.
④ ⏯: Pressed during play this button pauses playback. Pressed while paused, and it restarts play.
⑤ ⏭: This button plays the next track.

Notes for using multi-zone (for compatible models only)

- To enjoy Spotify music in a separate room, manually select "NET" as the input of the separate room. After doing that, select this unit with the Spotify app.
- Volume adjustment with the Spotify app is possible only for speakers connected to the ZONE speaker terminals or when the volume of the audio device in the other room is configured so that its volume can be adjusted on this unit. Adjust the volume on the audio equipment in the other room in any other case.
- To enjoy Spotify music in the main room after playing it in a separate room, select "NET" as the input of the main room.

Spotify®

Spotify

Icons on the display

: Playing

: Pause

: Artist

: Album

Music Server

Overview

Streaming play of music files stored on PCs or NAS devices connected to the same network as this unit is supported.

- The network servers this unit is compatible with are those PCs with players installed that have the server functionality of Windows Media® Player 11 or 12, or NAS that are compatible with home network functionality. You may need to make some settings in advance to use Windows Media® Player 11 or 12. Note that only music files registered in the library of Windows Media® Player can be played.

Music Server

Configuring the Windows Media® Player

Windows Media® Player 11

1. Turn on your PC and start Windows Media® Player 11.
2. In the "Library" menu, select "Media Sharing" to display a dialog box.
3. Select the "Share my media" check box, and then click "OK" to display the compatible devices.
4. Select this unit, and then click "Allow".
   - When it is clicked, the corresponding icon is checked.
5. Click "OK" to close the dialog.

- Depending of the version of Windows Media® Player, there may be differences in the names of items you can select.

Windows Media® Player 12

1. Turn on your PC and start Windows Media® Player 12.
2. In the "Stream" menu, select "Turn on media streaming" to display a dialog box.
   - If media streaming is already turned on, select "More streaming options..." in the "Stream" menu to list players in the network, and then go to step 4.
3. Click "Turn on media streaming" to list players in the network.
4. Select this unit in "Media streaming options" and check that it is set to "Allow".
5. Click "OK" to close the dialog.

- Depending of the version of Windows Media® Player, there may be differences in the names of items you can select.

Music Server

Play

1. Start the server (Windows Media® Player 11, Windows Media® Player 12, or NAS device) containing the music files to play.
2. Make sure that the PCs and/or NASs are properly connected to the same network as this unit.
3. Press NET on the remote controller to display the network service list screen.
   - If the "NET" indicator flashes in the display, the unit is not properly connected to the network. Check the connection.

4. With the cursors on the remote controller, select "Music Server", and then press ENTER.
5. Select the target server with the cursors on the remote controller and press ENTER to display the items list screen.
   - The unit cannot access pictures and videos stored on servers.
   - Contents stored on the server may not be displayed depending on the server sharing settings.
6. With the cursors on the remote controller, select the music file to play, and then press ENTER to start playback.
   - If "No Item." is displayed, check whether the network is properly connected.

- To return to the previous screen, press ⮌.
- For music files on a server, there can be up to 20,000 tracks per folder, and folders may be nested up to 16 levels deep.
- Depending on the media server, the unit may not recognize it, or may not

be able to play its music files.

Operations with the remote controller:

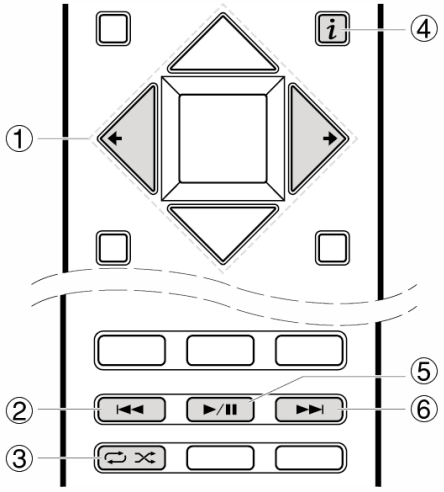

① ◄/►: When the folder or file lists are not shown on one screen, you can change the screen.
② ⏮: This button plays the previous track.
③ 🔁 🔀: This button lets you start repeat or random playback. Pressing this button repeatedly cycles through the repeat modes.
④ 𝒊 : Pressed during play, this button changes the displayed track information. Pressed while a folder or file list is displayed, this button returns you to the play screen.
⑤ ⏯: Pressed during play this button pauses playback. Pressed while paused, and it restarts play.
⑥ ⏭: This button plays the next track.

Icons Displayed during Playback:
Icons are displayed on the display during music file playback. The meaning of each icon is as follows:

: Folder

: Track

: Playing

: Pause

: Artist

: Album

: Repeat One Track

: Repeat within a folder

: Shuffle

Music Server

Controlling Remote Playback from a PC

You can use this unit to play music files stored on your PC by operating the PC inside your home network. The unit supports remote playback with Windows Media® Player 12. To use the remote playback function with Windows Media® Player 12, it must be configured in advance.

Setting PC

1. Turn on your PC and start Windows Media® Player 12.
2. In the "Stream" menu, select "Turn on media streaming" to display a dialog box.
   - If media streaming is already turned on, select "More streaming options..." in the "Stream" menu to list players in the network, and then go to step 4.
3. Click "Turn on media streaming" to list players in the network.
4. Select this unit in "Media streaming options" and check that it is set to "Allow".
5. Click "OK" to close the dialog box.
6. Open the "Stream" menu and check that "Allow remote control of my Player..." is checked.

- Depending of the version of Windows Media® Player, there may be differences in the names of items you can select.

Remote playback

1. Turn on the power of the unit.
2. Turn on your PC and start Windows Media® Player 12.
3. Select and right-click the music file to play with Windows Media® Player 12.
   - To remotely play a music file on another server, open the target server from "Other Libraries" and select the music file to play.

4. Select this unit in "Play to" to open the "Play to" window of Windows Media® Player 12 and start playback on the unit.
   - Operations during remote playback are possible from the "Play to" window on the PC. The playback screen is displayed on the TV connected to the HDMI output of the unit. If your PC is running on Windows® 8, click "Play to", and then select this unit.
5. Adjust the volume using the volume bar on the "Play to" window.
   - Sometimes, the volume displayed on the remote playback window may differ from that appeared on the display of the unit.
   - When the volume is adjusted from the unit, the value is not reflected in the "Play to" window.
   - This unit cannot play music files remotely in the following conditions.
     – It is using a network service.
     – It is playing a music file on a USB storage device.

- Depending of the version of Windows Media® Player, there may be differences in the names of items you can select.

Music Server

Supported Audio Formats

This unit supports the following music file formats. Note that playback via wireless LAN of sampling rates of 88.2 kHz or higher, DSD, and Dolby TrueHD are not supported. Remote play of FLAC, DSD, and Dolby TrueHD is also not supported.

MP3 (.mp3/.MP3):
- Supported formats: MPEG-1/MPEG-2 Audio Layer 3
- Supported sampling rates: 44.1 kHz, 48 kHz
- Supported bitrates: Between 8 kbps and 320 kbps. Incompatible files cannot be played.

WMA (.wma/.WMA):
- Supported sampling rates: 44.1 kHz, 48 kHz
- Supported bitrates: Between 5 kbps and 320 kbps. Incompatible files cannot be played.
- WMA Pro/Voice/WMA Lossless formats are not supported

WAV (.wav/.WAV):
WAV files include uncompressed PCM digital audio.
- Supported sampling rates: 44.1 kHz, 48 kHz, 64 kHz, 88.2 kHz, 96 kHz, 176.4 kHz, 192 kHz
- Quantization bit: 8 bit, 16 bit, 24 bit

AIFF (.aiff/.aif/.aifc/.afc/.AIFF/.AIF/.AIFC/.AFC):
AIFF files include uncompressed PCM digital audio.
- Supported sampling rates: 44.1 kHz, 48 kHz, 64 kHz, 88.2 kHz, 96 kHz, 176.4 kHz, 192 kHz
- Quantization bit: 8 bit, 16 bit, 24 bit

AAC (.aac/.m4a/.mp4/.3gp/.3g2/.AAC/.M4A/ .MP4/.3GP/.3G2):
- Supported formats: MPEG-2/MPEG-4 Audio
- Supported sampling rates: 44.1 kHz, 48 kHz, 64 kHz, 88.2 kHz, 96 kHz
- Supported bitrates: Between 8 kbps and 320 kbps. Incompatible files cannot be played.

FLAC (.flac/.FLAC):
- Supported sampling rates: 44.1 kHz, 48 kHz, 64 kHz, 88.2 kHz, 96 kHz, 176.4 kHz, 192 kHz

- Quantization bit: 8 bit, 16 bit, 24 bit

LPCM（Linear PCM）:
- Supported sampling rates: 44.1 kHz, 48 kHz
- Quantization bit: 16 bit

Apple Lossless (.m4a/.mp4/.M4A/.MP4):
- Supported sampling rates: 44.1 kHz, 48 kHz, 64 kHz, 88.2 kHz, 96 kHz
- Quantization bit: 16 bit, 24 bit

DSD (.dsf/.dff/.DSF/.DFF):
- Supported formats: DSF/DSDIFF
- Supported sampling rates: 2.8 MHz, 5.6 MHz

- Variable bit-rate (VBR) files are supported. However, playback times may not be displayed correctly.
- Remote playback does not support the gapless playback.

Before starting the procedure

Problems may be solved by simply turning the power on/off or disconnecting/connecting the power cord, which is easier than working on the connection, setting and operating procedure. Try the simple measures on both the unit and the connected device. If the problem is that the video or audio is not output or the HDMI linked operation does not work, disconnecting/connecting the HDMI cable may solve it. When reconnecting, be careful not to wind the HDMI cable since if wound the HDMI cable may not fit well. After reconnecting, turn off and on the unit and the connected device.

- This unit contains a microPC for signal processing and control functions. In very rare situations, severe interference, noise from an external source, or static electricity may cause it to lockup. In the unlikely event that this happens, unplug the power cord from the wall outlet, wait at least 5 seconds, and then plug it back in.
- Our company is not responsible for reparations for damages (such as CD rental fees) due to unsuccessful recordings caused by the unit's malfunction. Before you record important data, make sure that the material will be recorded correctly.

Power

- Cannot turn on the unit
- Make sure that the power cord is properly plugged into the wall outlet.
- Unplug the power cord from the wall outlet, wait 5 seconds or more, then plug it in again.

- The unit turns off unexpectedly
- The unit automatically switches to standby when the "System Setup" - "Hardware" - "Power Management" - "Auto Standby" setting in the Home screen functions.
- The protective circuit function may have been activated. If this has occurred, "AMP Diag Mode" appears on the display when the unit is turned on again, and the unit enters diagnostic mode. If the results of the diagnosis is that there is no problem, the "AMP Diag Mode" display disappears and you can use the unit normally again. If "CHECK SP WIRE" appears on the display, the speaker cables may be short-circuited. Make sure bare speaker wires are not touching each other or the back panel of the unit, then turn the unit on again. If "NG" is displayed, immediately unplug the power cord from the wall outlet and contact your dealer.
- The protective circuit function may have been activated because the temperature of the unit rose abnormally. If this happens, then the power will continue to turn off after you have turned the unit on again. Make sure the unit has plenty of space for ventilation around it, wait for the unit to cool down sufficiently, and then try turning it on again.

WARNING: If smoke, smell or abnormal noise is produced by the unit, unplug the power cord from the wall outlet immediately and contact the dealer or our company's support.

Audio

- Make sure that the speaker setup microphone is not still connected.
- Confirm that the connection between the output jack on the device and the input jack on this unit is correct.
- Make sure that none of the connecting cables are bent, twisted, or damaged.
- If the MUTE indicator on the display flashes, press on the remote controller to cancel muting.
- While headphones are connected to the PHONES jack, no sound is output from the speakers.
- When "System Setup" - "Source" - "Audio Select" - "Fixed PCM" in the Home Menu is set to "On", no sound is played when signals other than PCM are input. Change the setting to Off.

Check the following if the above does not fix the problem:

- There is no sound from the TV
- No sound from a connected player
- A speaker produces no sound
- The subwoofer produces no sound
- Noise can be heard
- The beginning of audio received by an HDMI IN cannot be heard
- Sound suddenly reduces

There is no sound from the TV

- Change the input selector on this unit to the position of the terminal to which the TV is connected.
- If the TV doesn't support the ARC function, along with connection by HDMI, connect the TV and this unit using a digital optical cable, digital coaxial cable, or analog audio cable.

No sound from a connected player

- Change the input selector on this unit to the position of the terminal to which the player is connected.
- Check the digital audio output setting on the connected component. On some game consoles, such as those that support DVD, the default setting is off.
- With some DVD-Video discs, you need to select an audio output format from a menu.

A speaker produces no sound

- Make sure that the polarity of the speaker cables (+/−) is correct, and that no bare wires are in contact with the metal part of speaker terminals.
- Make sure that the speaker cables are not shorting.
- Check in "Connect the Speakers" in the Basic Manual that the speaker connections have been made correctly. Settings for the speaker connection environment need to be made in "Full Auto MCACC" in Initial Setup. Check in "Initial Setup" in the Basic Manual.
- Depending on the source and current listening mode, not much sound may be produced by the surround speakers. Select another listening mode to see if sound is output.
- If you are installing surround back speakers (for compatible models only), surround speakers are required.
- A maximum of 5.1 ch playback is possible when Bi-Amping connection is used (for compatible models only). Further, make sure you remove the jumper bar on the speakers when using Bi-Amping connection.

The subwoofer produces no sound

- When you play source material that contains no information in the LFE channel, the subwoofer produces no sound.

Noise can be heard

- Using cable ties to bundle audio cables with power cords, speaker cables, etc. may degrade the audio performance, so refrain from doing it.
- An audio cable may be picking up interference. Try repositioning your cables.

The beginning of audio received by an HDMI IN cannot be heard

- Since it takes longer to identify the format of an HDMI signal than it does for other digital audio signals, audio output may not start immediately.

Sound suddenly reduces

- When the temperature inside the unit exceeds a certain temperature for extended periods, the volume may be reduced automatically to protect the circuits.

Listening Modes

- To enjoy digital surround playback, such as Dolby Digital, the audio signals need to pass through a connection via HDMI cable, digital coaxial cable, or digital optical cable. Audio output should be set to bitstream output on the connected Blu-ray Disc player or other device.
- Press *i* on the remote controller several times to switch the display of the main unit to check the input format.

Check the following if the above does not fix the problem:

- Cannot select a desired listening mode
- There is no sound with Dolby TrueHD, Dolby Atmos, and DTS-HD Master Audio (for compatible models only)

Cannot select a desired listening mode

- Depending on the connecting status of the speaker, some listening modes may not be selected. Check in "Selectable Listening Modes" in "Listening Modes" in the Advanced Manual.

There is no sound with Dolby TrueHD, Dolby Atmos, and DTS-HD Master Audio (for compatible models only)

- You need to connect surround back speakers or height speakers to enjoy Dolby Atmos. Furthermore, Dolby Atmos can only be enjoyed when the input signals are Dolby Atmos.
- If you cannot output formats such as Dolby TrueHD, Dolby Atmos, or DTS-HD Master Audio according to the format of the source, in the Blu-ray Disc player settings try setting "BD video supplementary sound" (or re-encode, secondary sound, video additional audio, etc.) to "Off". Change the listening mode for each source after changing the setting to confirm.

About DTS signals

- With media that switches suddenly from DTS to PCM, PCM playback may not start immediately. In such cases, you should stop your player for about 3 seconds and then resume playback.
- With some CD and LD players, you will not be able to playback DTS material properly even though your player is connected to a digital input on the unit. This is usually because the DTS bitstream has been processed (e.g., output level, sampling rate, or frequency response changed) and the unit does not recognize it as a genuine DTS signal. In such cases, you may hear noise.
- Playing DTS program material, using the pause, fast forward, or fast reverse function on your player may produce a short audible noise. This is not a malfunction.

Video

- Confirm that the connection between the output jack on the device and the input jack on this unit is correct.
- Make sure that none of the connecting cables are bent, twisted, or damaged.
- When the TV image is blurry or unclear, power code or connection cables of the unit may have interfered. In that case, keep distance between TV antenna cable and cables of the unit.
- Make sure the switching of input screens is proper at the monitor side such as a TV.

Check the following if the above does not fix the problem:

- There is no video
- There is no picture from a source connected to an HDMI IN terminal.
- Images flicker
- Video and audio are out of synch

There is no video

- Change the input selector on this unit to the position of the terminal to which the player is connected.

There is no picture from a source connected to an HDMI IN terminal.

- To display video from the connected player on the TV screen while the unit is in standby, you need to enable "System Setup" - "Hardware" - "HDMI" - "HDMI Standby Through" in the Home screen. Refer to "HDMI Setup" in "Setup" in the Basic Manual for information about HDMI Standby Through.
- To output video to a TV connected to the HDMI OUT SUB jack (for compatible models only), in the "AV Adjust" menu displayed when is pressed on the remote controller select the HDMI OUT jack for output in "Other" - "HDMI Out".
- If you connect a player supporting HDCP2.2, be sure to connect it to one of the HDMI IN1 to IN3 jacks of the unit.
- Check if "Resolution Error" is displayed on the main unit display when video input via HDMI IN jack is not displayed. In this case, the TV does not support the resolution of the video input from the player. Change the setting on the player.
  Reliable operation with an HDMI-DVI adapter is not guaranteed. In addition, video signals from a PC are not supported.

Images flicker

- It is possible that the resolution of the player is not compatible with the TV's resolution. If you have connected the player to this unit with an HDMI cable, try changing the output resolution on the player. There also may be an improvement if you change the screen mode on the TV.

Video and audio are out of synch

- Video may be delayed relative to audio depending on the settings and connections with your television. To adjust, press on the remote controller, and adjust in "Other" - "Sound Delay" in "AV Adjust".

Linked operation

- There is no linked operation with CEC compliant devices, such as a TV.
- Set "System Setup" - "Hardware" - "HDMI" - "HDMI CEC" in the Home screen of the unit to "On".
- It is also necessary to set HDMI linking on the CEC compliant device. Check the instruction manual.
- When connecting a Sharp brand player or recorder to the HDMI IN 1 to 3 jacks, set "System Setup" - "Hardware" - "HDMI" - "HDMI Standby Through" to "Auto".

Tuner

- Radio reception is poor or there is a lot of noise.
- Re-check the antenna connection.
- Relocate your antenna.
- Move the unit away from your TV or PC.
- Passing cars and airplanes can cause interference.
- Concrete walls weaken radio signals.
- Listen to the station in mono.
- When listening to an AM station, operating the remote controller may cause noise.
- FM reception may become clearer if you use the antenna jack on the wall used for the TV.

BLUETOOTH function

- Try plugging/unplugging the power of the unit and try turning on/off the BLUETOOTH enabled device. Re-startup of the BLUETOOTH enabled device may be effective.
- The BLUETOOTH enabled devices must support the A2DP profile.
- Near components such as microwave oven or cordless phone, which use the radio wave in the 2.4 GHz range, a radio wave interference may occur, which disables the use of this unit.
- If there is a metallic object near the unit, BLUETOOTH connection may not be possible as the metal can effect on the radio waves.

Check the following if the above does not fix the problem:

- Cannot connect with this unit
- Music playback is unavailable on the unit even after successful BLUETOOTH connection
- Sound is interrupted
- The audio quality is poor after connection with a BLUETOOTH enabled device

Cannot connect with this unit

- Check that the BLUETOOTH function of the BLUETOOTH enabled device is enabled.

Music playback is unavailable on the unit even after successful BLUETOOTH connection

- When the audio volume of your BLUETOOTH enabled device is set low, the playback of audio may be unavailable. Volume up the BLUETOOTH enabled device.
- Depending on the BLUETOOTH enabled device, Send/Receive selector switch may be provided. Select Send mode.
- Depending on the characteristics or specifications of your BLUETOOTH enabled device, playback on the unit is not guaranteed.

Sound is interrupted

- Problem may be occurring at the BLUETOOTH enabled device. Check the information on the internet.

- The audio quality is poor after connection with a BLUETOOTH enabled device
- The BLUETOOTH reception is poor. Move the BLUETOOTH enabled device closer to the unit or remove any obstacle between the BLUETOOTH enabled device and this unit.

Network function

- If you cannot select a network service, it will become selectable when the network function is started. It may take about a minute to start up.
- When NET is blinking, this unit is not properly connected to the home network.
- Try plugging/unplugging the power supply of this unit and the router, and try rebooting the router.
- If the desired wireless LAN router is not in the access point list, it may be set to hide SSID or the ANY connection may be off. Change the setting and try again.

Check the following if the above does not fix the problem:

- Cannot access the Internet radio
- Cannot access the network server
- Playback stops while listening to music files on the network server

Cannot access the Internet radio

- Certain network service or contents available through the unit may not be accessible in case the service provider terminates its service.
- Make sure that your modem and router are properly connected, and make sure they are both turned on.
- Make sure that the LAN side port on the router is properly connected to this unit.
- Make sure that connecting to Internet from other components is possible. If connecting is not possible, turn off all components connected to the network, wait for a while, and then turn on the components again.
- If a specific radio station is unavailable for listening, make sure the registered URL is correct, or whether the format distributed from the radio station is supported by this unit.
- Depending on ISP, setting the proxy server is necessary.
- Make sure that the used router and/or modem is supported by your ISP.

Cannot access the network server

- This unit needs to be connected to the same router as the network server.
- This unit is compatible with Windows Media® Player 11 or 12 network servers or NAS that are compatible with home network functionality.
- You may need to make some settings on Windows Media® Player. Check in "Music Server" in "Playback Function" in the Advanced Manual.
- When using a PC, only music files registered in the Windows Media® Player library can be played.

Playback stops while listening to music files on the network server

- Make sure the network server is compatible with this unit.
- When the PC is serving as the network server, try quitting any application software other than the server software (Windows Media® Player 12, etc.).
- If the PC is downloading or copying large files, the playback may be interrupted.

USB storage device

USB storage device is not displayed

- Check whether the USB storage device or USB cable is correctly inserted to the USB port of the unit.
- Disconnect the USB storage device from the unit, and then try reconnecting.
- Performance of the hard disk that receive power from the USB port of the unit is not guaranteed.
- Depending on the type of format, the playback may not be performed normally. Check the type of the file formats that is supported.
- USB storage devices with security functions may not be played.

Wireless LAN Network

- Try plugging/unplugging the power supply of wireless LAN router and the unit, check the wireless LAN router power-on status, and try reboot of the wireless LAN router.

Check the following if the above does not fix the problem:

- Cannot access wireless LAN network
- Connected to an SSID different to the SSID selected
- Playback is interrupted and communication does not work

Cannot access wireless LAN network

- The wireless LAN router setting may be switched to Manual. Return the setting to Auto.
- Try the manual set-up. The connection may succeed.
- When the wireless LAN router setting is at stealth mode (mode to hide the SSID key) or when ANY connection is off, the SSID is not displayed. Change the setting and try again.
- Check that the setting of SSID and encryption (WEP, etc.) is correct. Make sure the network settings of the unit is properly set.
- Connection to an SSID that includes multi-byte characters is not supported. Name the SSID of the wireless LAN router using single-byte alphanumeric characters only and try again.

Connected to an SSID different to the SSID selected

- Some wireless LAN routers allow you to set multiple SSIDs for one unit. If you use the automatic setting button on such a router, you may end up connecting with a different SSID from the SSID you wanted to connect to. Use the connection method requiring you to enter a password if this happens.

Playback is interrupted and communication does not work

- You may not receive radio waves due to bad radio wave conditions. Shorten the distance from the wireless LAN access point or remove obstacles to improve visibility, and try again. Place the unit away from microwave ovens or other access points. It is recommended to place the wireless LAN router (access point) and the unit in the same room.
- If there is a metallic object near the unit, wireless LAN connection may not be possible as the metal can effect on the radio wave.
- When other wireless LAN devices are used near the unit, several issues such as interrupted playback and communication may occur. You can avoid these issues by changing the channel of your wireless LAN router. For instructions on changing channels, see the instruction manual provided with your wireless LAN router.

Multi-zone function (for compatible models only)

Cannot ZONE output audio of external AV component

- Depending on the model, input by HDMI cable may not be supported. Check in "Multi-zone Connection" in the Basic Manual, and if input by HDMI cable is not supported, connect using a cable that is supported.
- The audio from externally connected AV components can only be output when the audio is analog or 2ch PCM audio signals. If you have connected the AV component to this unit with a digital cable, the audio output of the AV component needs to be set to PCM.

Others

- Settings are required in Initial Setup, "Multi Zone Setup" to use the multi-zone feature. Check in "Initial Setup" in the Basic Manual.
- If the audio signal is from the NET input selector, zone output is not possible for DSD and Dolby TrueHD audio signals.

Remote Controller

- Make sure that the batteries are installed with the correct polarity.
- Install new batteries. Do not mix different types of batteries, or old and new batteries.
- Make sure that the unit is not subjected to direct sunshine or inverter-type fluorescent lights. Relocate if necessary.
- If the unit is installed in a rack or cabinet with colored-glass doors or if the doors are closed, the remote controller may not work reliably.
- After operating the Multi-zone function (for compatible models only), the remote controller may have switched to the mode for operating ZONE output audio. Check "Multi-zone" in "Playback" in the Basic Manual to switch the remote controller back to the mode for operating in the main room.

Display, OSD

The display doesn't light

- The display may go dim while the Dimmer is working, and may also turn off (for compatible models only). Press DIMMER button and change the brightness level of the display.

Others

- Strange noises can be heard from the unit
  - If you have connected another unit to the same wall outlet as this unit, this noise may be an effect from the other unit. If the symptoms improve by unplugging the power cord of the other unit, use different wall outlets for this unit and the other unit.

- When performing Full Auto MCACC, the message "Noise Error" appears
  - This can be caused by a malfunction in your speaker unit. Check if the unit produces normal sounds.

- DRC function does not work
  - Make sure the source material is Dolby Digital, Dolby Digital Plus, Dolby TrueHD, or DTS.

Radio Wave Caution

This unit uses radio waves in the 2.4 GHz and 5GHz frequency bands. There are nations and regions where the use of particular 5 GHz bands are prohibited outdoors, so do not use this unit outside in those places.
2.4 GHz radio waves are used by a variety of devices, as shown in lists 1 and 2 below.

1. Devices which use a 2.4 GHz radio wave frequency
   - Cordless phones
   - Cordless facsimiles
   - Microwave ovens
   - Wireless LAN devices (IEEE802.11b/g/n)
   - Wireless AV equipment
   - Wireless controllers for game systems
   - Microwave oven-based health aids
   - Video transmitter
   - Specific type of external monitor and LCD display
2. Less common devices which use a 2.4 GHz radio wave frequency
   - Anti-theft systems
   - Amateur radio stations (HAM)
   - Warehouse logistic management systems
   - Discrimination systems for train or emergency vehicles

If these devices and the AV receiver are used at the same time, the audio may be undesirably stopped or disturbed due to a radio wave interference.
Suggestions for improvement

- Switch off the devices which emit the radio wave.
- Place the interfering devices away from the AV receiver.

- The AV receiver uses radio wave, and a third person can receive the wave on purpose or accidentally. Do not use the communication for important or fatal matters.
- We assume no responsibility whatsoever for any error or damage of network environment or access device resulting from the use of this apparatus.
  Confirm with the provider or access device maker for more information.

Scope of Operation

Use of the AV receiver is limited to home use. (Transmission distances may be reduced depending on communication environment.)
In the following locations, poor condition or inability to receive radio waves may cause the audio to be interrupted or stopped:

- In reinforced concrete buildings or steel framed or iron framed buildings.
- Near large metallic furniture.
- In a crowd of people or near a building or obstacle.
- In a location exposed to the magnetic field, static electricity or radio wave interference from radio communication equipment using the same frequency band (2.4 GHz) as the AV receiver, such as a 2.4 GHz wireless LAN device (IEEE802.11b/g/n) or microwave oven.
- If you live in a heavily populated residential area (apartment, townhouse, etc.) and if your neighbor's microwave oven is placed near your AV receiver, you may experience radio wave interference. If this occurs, move your AV receiver to a different place.
  When the microwave oven is not in use, there will be no radio wave interference.

Radio Wave Reflections

The radio waves received by the AV receiver include the radio wave coming directly from the devices and waves coming from various directions due to reflections by walls, furniture and building (reflected waves). The reflected waves (due to obstacles and reflecting objects) further produce a variety of reflected waves as well as variation in reception condition depending on locations. If the audio cannot be received properly due to this phenomenon, try moving the location of the wireless LAN device a little.
Also note that audio may be interrupted due to the reflected waves when a person crosses or approaches the space between the AV receiver and the wireless LAN device.

- We assume no responsibility whatsoever for any damages resulting from the use of this apparatus except in the cases deemed acceptable under the applicable laws and regulations.
- Operation in all environment is not guaranteed for wireless LAN. The communication may not be possible or have desirable communication speed.

Precautions

- Do not use this apparatus near an electronic device handling high-accuracy controls or weak signals. Doing so may cause an accident due to a malfunction of the device.
- Do not use this apparatus in use prohibited location such as an aircraft equipment or a hospital. Doing so may cause an accident due to a malfunction of an electronic device or an electro-medical apparatus. Follow the instructions of the medical facilities.

Electronic device which requires cautions

Hearing aid, pace maker, other medical electronic devices, fire alarm, automatic door, and other automatic control device.
When using a pace maker or other medical electronic devices, confirm with the medical electronic device maker or dealer for the effect of the radio wave.

SN 29402300HTML
(C) Copyright 2016 Onkyo & Pioneer Corporation Japan. All rights reserved.
Onkyo group has established its Privacy Policy, available at [http://www.pioneer-audiovisual.com/privacy/].