Rewritable DVD Benefits and Technologies

Abstract

This paper provides information about recordable DVD technology for the Microsoft® Windows® family of operating systems. It provides guidelines for recordable DVD related engineers to understand a new defect management technology for rewritable DVD.

March 6, 2003

PROJECT INFO

Info	Details
Owner:	DVD Recordable special interest group <SIG members> Hitachi, Ltd. Matsushita Electric Industrial Co., Ltd. PIONEER CORPORATION TOSHIBA CORPORATION <Representative contact window> Andy Parsons SVP Business Solutions Division PIONEER ELECTRONICS (USA) INC. Tel: +1-310-952-2129 E-Mail: andy.parsons@pioneer-usa.com
Audience:	This information is provided to DVD recordable technology related engineers.
Goal/purpose:	To understand the necessity of defect management technology for DVD recordable products and a new software defect management technology for the DVD-RW format.
Related WinHEC session(s):	Recordable DVD panel discussion. Other related sessions of DVD recordable technologies.
Dependencies:	No related information.
Special info for reviewers/editors:	For All DVD technology, please visit the DVD Forum's website. For more details about the new software defect management technology, please refer to the SFF-8090i document.

END PRIVATE PROJECT INFO

Contents

Windows Hardware Engineering Conference

Revision History

Date	Change / By

Introduction

This paper provides information about a newly specified defect management scheme that is performed by collaboration among a drive, a device driver and a UDF file system driver. In the new defect management scheme, the drive only reports information about a defective block and an operation to "spare" the defective block is performed by the UDF file system driver. The device driver transports necessary information between them. The new defect management scheme is called "Software Defect Management" and it can be applied to a medium that does not support a dedicated spare area, such as the DVD-RW medium. This new Software Defect Management was developed as a joint effort between the Mt. Fuji group and the DVD Forum.

The Mt. Fuji group is a voluntary industry group that addresses the command set for optical disc drives. The group was formed in 1996. The original mission was to update ATAPI CD-ROM command specifications to support reading of DVD-ROM media. Later, the Mt. Fuji group's objectives were broadened gradually to encompass any optical media and interfaces. The current Mt. Fuji specification provides commands to implement support for the CD-ROM, CD-R, CD-RW, DVD-ROM, DVD-R, DVD-RW, DVD-RAM, DVD+RW and AS-MO formats. This command set may be implemented on multiple interfaces such as SCSI, ATA/ATAPI, SBP-2 (IEEE-1394), and FC-P (Fibre Channel). The finalized Mt. Fuji specification will be forwarded to standardization bodies such as SFFC and ANSI.

The DVD Forum is an association of hardware manufacturers, software firms and other users of Digital Versatile Discs to exchange and disseminate ideas and information about the DVD Format and its technical capabilities, improvements and innovations. The DVD Forum was founded in 1995 under the original name of the DVD Consortium. Today, its membership includes more than 230 companies.

Since its first specifications were created, i.e. the DVD-ROM physical specification, DVD-ROM file system specification and DVD Video format specification in 1996, the DVD Forum has worked to promote broad acceptance of DVD products on a worldwide basis across entertainment, consumer electronics and IT industries. For instance, to be eligible to use the DVD logo, licensees must submit products for specification verification as required by the DVD Format/Logo License Agreement. There are 15 Class-A Verification laboratories worldwide.

However, the main objective of the DVD Forum is still to create format specifications that meet market demand as well as requirements from the motion picture, IT and consumer electronics industries. After completing its first specifications, the DVD Forum defined DVD-RAM, DVD-R, DVD-RW, DVD Audio, DVD Stream Recording and DVD Video Recording. DVD Audio Recording will be defined soon. Among these, the DVD Video Recording (VR) format was introduced in 1999 to realize defect-tolerant real time recording that has defect management capability for editing, overwriting and interchanging media while maintaining a close relationship to the DVD Video application layer.

For more information about the DVD Forum, please visit DVD Forum's web site at www.dvdforum.org.

Defect Management Implementation on Consumer DVD Recorders

Consumer DVD recorders equipped with the DVD Video Recording (VR) format came to the market in 1999 and have shipped more than one million units worldwide as of the end of last year.

The VR format has two primary functions: "real time recording" and "ease of editing after recording".

Necessity of Defect Management

Defect management provides a mechanism to recover unsuccessful data writing and to avoid unsuccessful data reading.

The objective of defect management is to increase data reliability and the interchangeability of media even if there are scratches or smudges.

Defect management technology needs to be implemented on both CE and PC DVD recorders/writers to ensure reliable data interchangeability within a versatile DVD network.

There are two types of defect management. One is the conventional drive-based defect management applied to hard disk, DVD-RAM and Mt. Rainier devices, which is hereafter called Hardware Defect Management, and the other is host-based drive-assisted defect management called Software Defect Management.

In the case of Hardware Defect Management, a drive performs defect management by using a dedicated spare area on a medium when it encounters a defective block.

In the case of the Software Defect Management, a host receives information of a defective block from a drive and performs defect management by reallocating the data at the file system layer by using the sparing table of the UDF file system. Although Software Defect Management is designed for a medium that does not support a dedicated spare area, e.g. the DVD-RW medium, it can be applied to any recordable medium operated under the UDF file system.

Within the DVD Forum, two kinds of rewritable DVD formats (DVD-RAM and DVD-RW) are available for consumer DVD recorders. Both media can use the same Video Recording (VR) format. But different defect management technologies are implemented based on the characteristics of each respective media.

DVD-RAM media has less physical compatibility with DVD-ROM media but pays special attention to written data reliability. Thus, hardware defect management technology is implemented to enhance reliability.

DVD-RW media, on the other hand, has focused on physical compatibility with DVD-ROM media. Thus, software defect management technology specified in OSTA UDF Revision 2.00 is implemented to achieve easy access to DVD-ROM drives and DVD players.

All VR format based recorders available in the market use one of the aforementioned defect management technologies to realize ease of use by virtually eliminating a defective block on a medium.

The DVD Forum/Mt. Fuji Activity Report for Software Defect Management

Defect Management on Rewritable Media

One point of concern about defect management is the performance impact during a write operation. To perform defect management, a drive has to verify written data after writing. If a defective block is found during the verify operation, replacement of the defective block within a spare block area occurs and writing performance decreases to less than the half of the maximum writing speed. This impact cannot be ignored during a real-time streaming operation.

Until now, the major functions of defect management, which are Verify after Write and Replacement Data to Spare Area, have been typically switched off during real-time streaming operations (e.g., video recording using the VR format).

The Mt. Fuji group discussed the issue and has defined a new model and new method. The model is called Logical Unit Assisted Software Defect Management.

The method is called Enhanced Defect Reporting (EDR) and Distributed Real-Time Defect Management (DRT-DM). EDR provides a defect management concept that ensures media interchangeability. DRT-DM is designed to add real-time streaming capability to software defect management with EDR. This defect management scheme can be switched on at any time, even during a real-time streaming operation.

What is Enhanced Defect Reporting (EDR)?

EDR provides a defect management concept that ensures media interchangeability. The EDR defines two new ideas: the standard playback model and three categorized defect levels.

The standard playback model defines a standard data readability and error correction method of consumer electronics products. EDR defines defect levels of specific media based on the standard playback model. Then various EDR-capable DVD writers can report the interchangeable defect level of specific media.

The three categorized defect levels are as follows:

"Type 1: interchangeable defect level"
: A block at or below this defect level should be sufficient for data recording/playback with typical consumer electronics products. The block may cause uncorrectable errors after certain overwrite cycles when used with the standard playback model.

"Type 2: Unreliable defect level"
: A block at this defect level may not be readable by typical consumer electronics products. However, a DVD writer/drive equipped with additional error correction capability can read the block. After a certain number of overwrite cycles, reading of the block may result in a fatal error, even with the additional error correction of the DVD writer/drive. A block with this defect level may not be suitable for data recording/playback with typical consumer electronics products.

"Type 3: Unusable defect level".
: A block at this defect level is not readable.

A defective block that is classified as Type 1 may become a Type 2 or 3 in the near future due to additional overwrites and other external factors. Figure 1 shows the error level transition caused by additional overwrites on DVD-RW media.

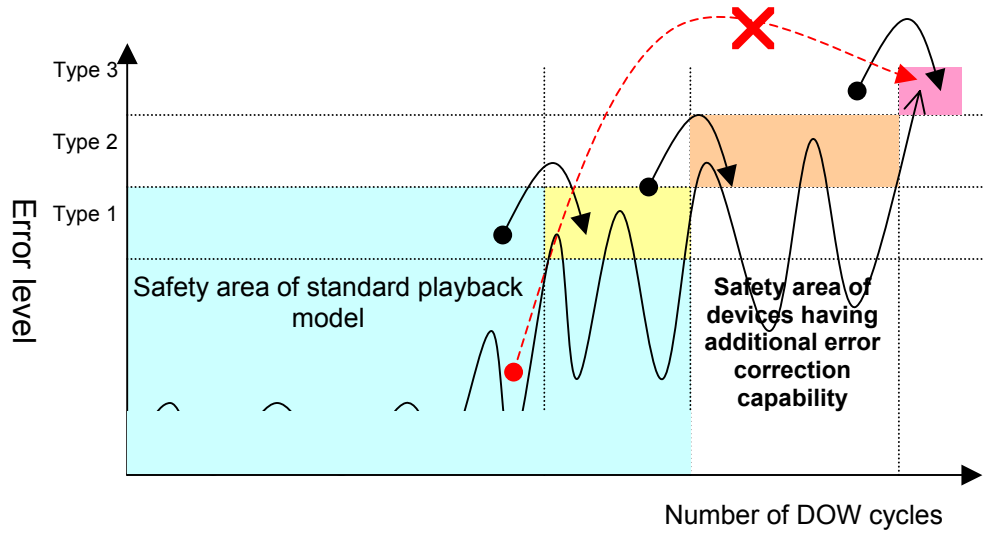

Figure 1: example of error rate transition

The Mt. Fuji Group has defined a defect transition model that is necessary for real-time recording for RW media. Figure 1 shows that errors detected in a given DVD-RW media sector may increase after many overwrite cycles. When this happens, the error level of such sectors may be changed from a lower level to higher level; it is not allowed to suddenly change from an error level lower than a Type 1 to a Type 3.

The host can take appropriate action depending on the level of a defect. Therefore, medium interchangeability can be handled properly.

What is DRT-DM?

DRT-DM provides an additional capability to the drive that allows it to memorize multiple defective block locations and defect levels during read operations. To realize this capability, the drive has a new dedicated memory called Defective Block Information (DBI) memory. The DBI memory enables a host to perform the defect management operation at a later time.

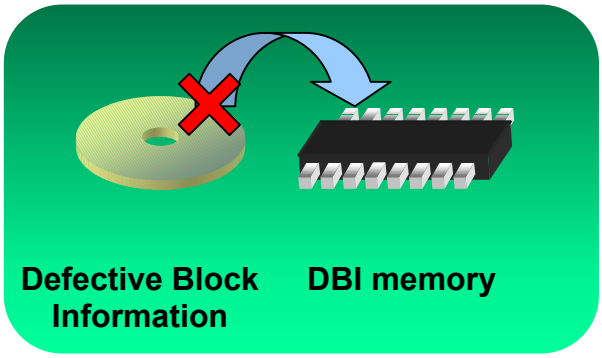

If the drive detects a defective block during read operations, its address and other related information such as defect level are stored in the DBI memory. The same holds true during real-time streaming.

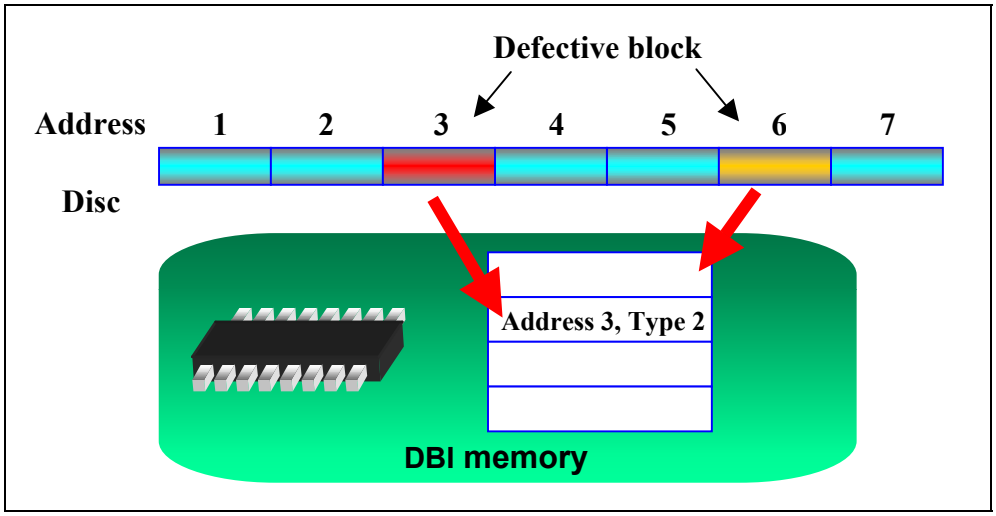

When the Drive detects an overwrite to a defective block during a real-time stream write operation, it is reported to the host. The host is then able to perform a defect management operation after the completion of the real-time streaming operation by referring to the information stored in the DBI memory.

The DVD Forum defines the UDF 2.00 file system as the file system of the DVD VR format. Two kinds of host defect management methods for DVD-RW media are defined in UDF 2.00. One method is sparing data from defective blocks to a spare area. Another method is mapping defective blocks to a special file "*UDF Non-Allocatable Space". Through the use of the second method, sparing area overflow can be avoided.

The Host can retrieve data within the DBI memory at any convenient time to perform defect management.

Summary

1. Greater recording capacity can be realized with EDR because an intermediate type of defective block can be used for more error-tolerant audio/video data. By avoiding a simple good-bad definition, these intermediate blocks can be successfully used for a significant number of rewrite cycles before they need to be considered fully defective. This in turn allows more of the disc surface to be used for a longer time.
2. Real time recording capability will be added to software defect management technology with DRT-DM. DRT-DM helps defect detection during real-time streaming playback/recording. This technology reduces the overhead of software defect management and increases its capability.

Resources and Call to Action

Call to Action:

- For system manufacturers: Study logical unit assisted software defect management model and select reliable writing software and device.
- For firmware engineers: Study Enhanced Defect Reporting feature and implement it correctly.
- For device manufacturers: Study logical unit assisted software defect management model and design reliable products.
- For driver developers: Study Enhanced Defect Reporting Feature and implement it correctly.

Feedback:

- To provide feedback about DRT-DM, please send e-mail to mtfuji@avc-pioneer.com

Acronyms and Terms

DRT-DM: Distributed Real-time Defect Management. One of Defect Management mode of Logical Unit assisted Software Defect Management.

DOW: Direct Overwrite

EDR: Enhanced Defect Reporting. Core defect management scheme of logical unit assisted software defect management.

Enhanced Defect Reporting Feature: Mandatory sets of commands and mode pages for Logical unit assisted software defect management.

Feature: sets of Commands, Mode Pages, and behaviors or operations specified for a drive.

Logical Unit assisted Software Defect Management model: Host and drive cooperative defect management scheme.

Host: a primary computing device, typically a personal computer.

DBI: Defective Block Information

ANSI: American National Standards Institute

SFFC: Small Form Factor Committee

OSTA UDF: Optical Storage Technology Association Universal Disc Format. This file system is hardware and media independent.

Mt. Fuji specification: available at ftp://ftp.avc-pioneer.com/Mtfuji5/Spec/